Better Homes and Gardens®

WOOD

THE MAGAZINE FOR HOME WOODWORKERS

$3.50

AUGUST 1986•ISSUE NO. 12
Display Until August 19

- **POWER MITER SAWS**
  WOOD reviews a new breed of compact cutoff saws
- **CARVING FINISHES**
  3 pros share their secrets
- **DOWN AT THE OL' SAWMILL**
  How they turn logs into lumber
- **OLD HAND TOOLS**
  Tips on restoring these timeless treasures
- **PROJECTS! PROJECTS!**
  Pint-sized tow truck
  Table-saw extensions
  QUICK 'N' EASY
  Serving tray
  Tie rack
  Sandpaper bin
  Parrot magnets
  Bookends

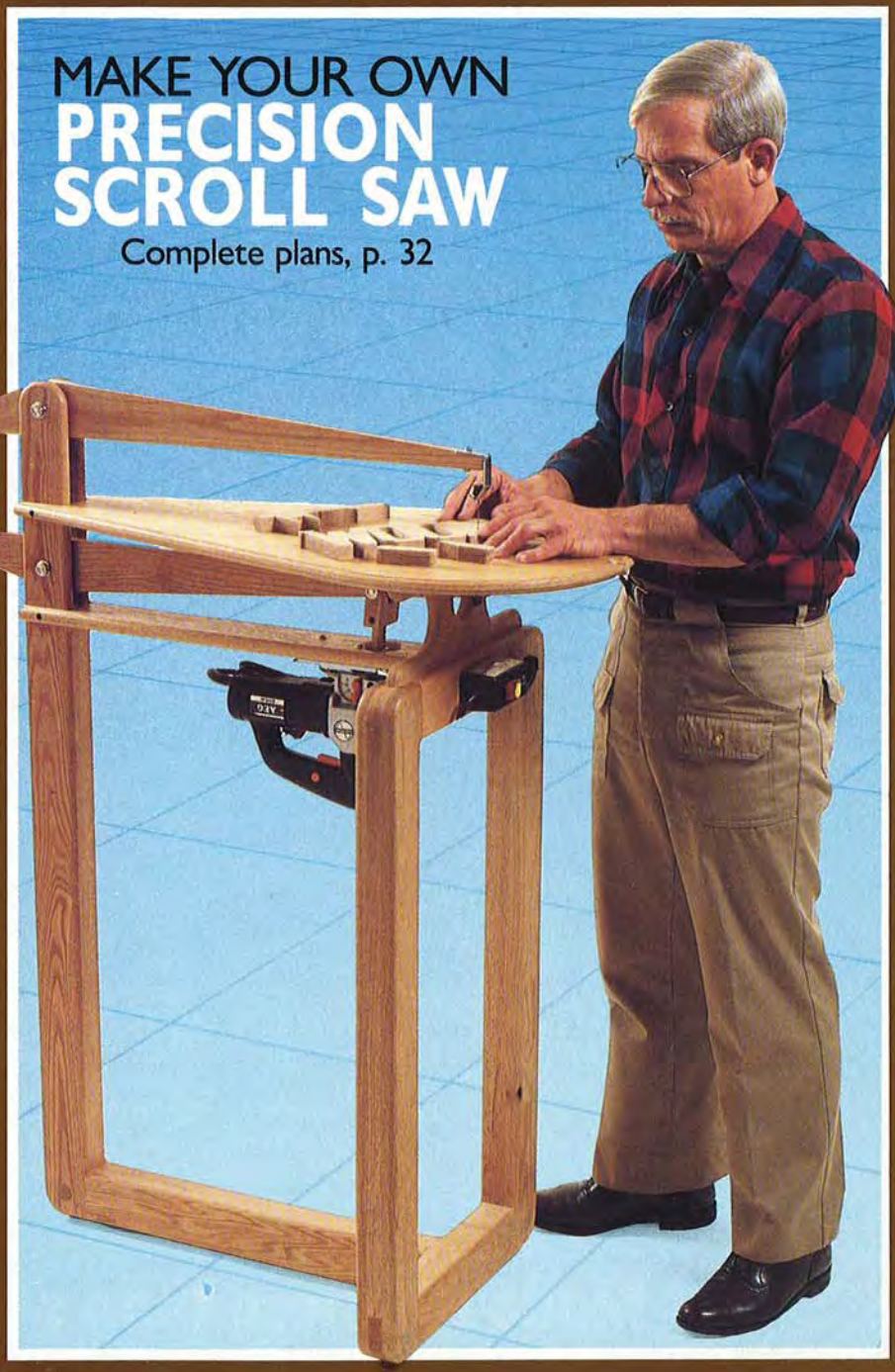

MAKE YOUR OWN
PRECISION SCROLL SAW
Complete plans, p. 32

08
14005 14072

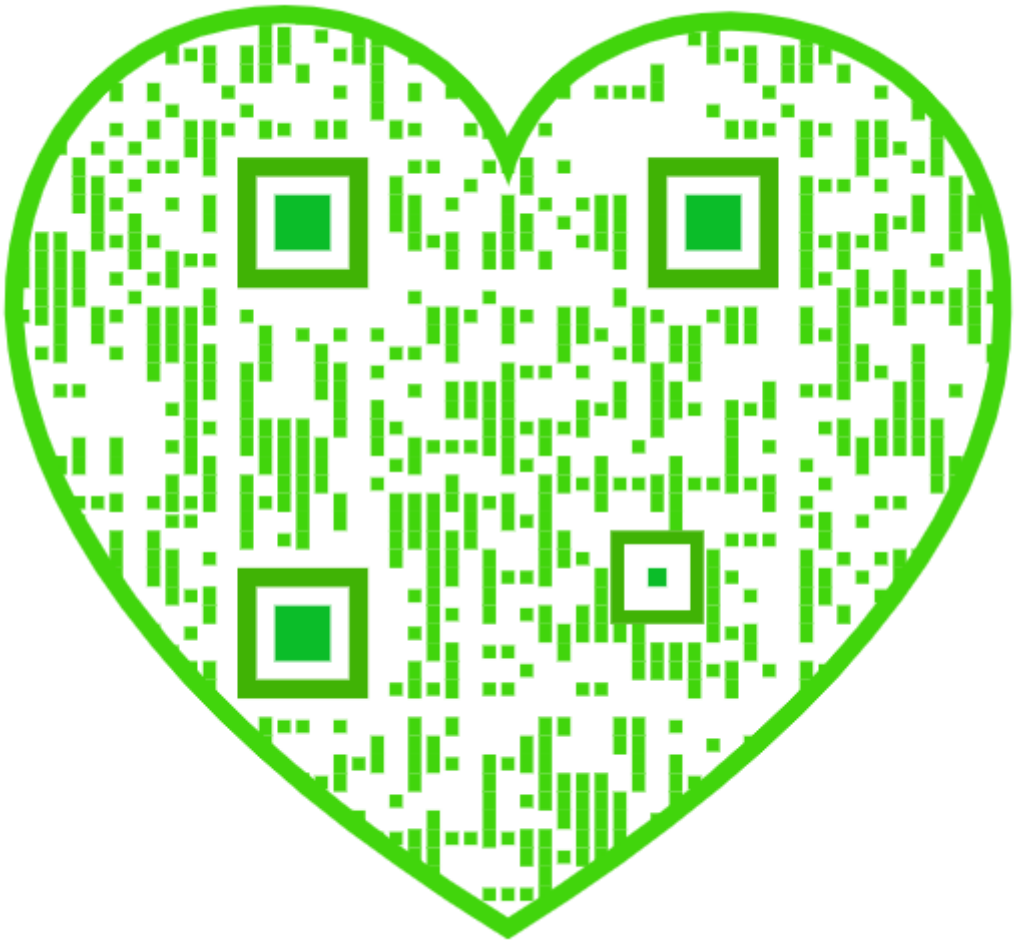

WE DON'T CUT CORNERS.

Instead, we offer professionals and serious craftsmen saws built right and equipped with the right features. The result? Saws that cut corners and virtually anything else with more speed, power, accuracy and reliability than run-of-the-mill power tools designed for occasional use by weekend novices.

The professional features on our JSE-60 jigsaw will show you what we mean. This variable speed saw features an electronic module that delivers constant speed with full torque on any job. An adjustable orbital action control to tailor the saw to the material being cut. And ball-bearing construction with hardened gears for super durability.

In short, it's made to make sawdust every day instead of gathering dust in between projects. Look for Ryobi saws and get the power tools made for more than weekends.

Made for more than weekends.

RYOBI®

1158 Tower Lane
Bensenville, IL 60106

COMPARE Total Shop®

WITH SHOPSMITH.® You'll actually *see* the improvement.

For Example:

1. **1½hp motor develops nearly 3hp while Shopsmith® motor is 1⅛hp developing 2hp.**
2. **Motor can be altered by owner to 220V. Shopsmith® does not have this option.**
3. **In more than 85% of the comparisons, the Shopsmith® machine is priced higher than the Total Shop® machine.**

Let us send you 11 more reasons Total Shop is a better buy.

CALL TODAY
toll free
1-800-845-9356
in S.C. call
288-4174

Total Shop®
has proudly created an in-home WOODWORKING VIDEO.

- **The first of its kind!**
- **30-min. presentation of the Total Shop and the TS 15-6 Planer.**
- **In-home viewing.**
- **$20.00 refundable deposit.**
- **Available in VHS and Beta.**

Now you can **see** our product at work **before** you buy.

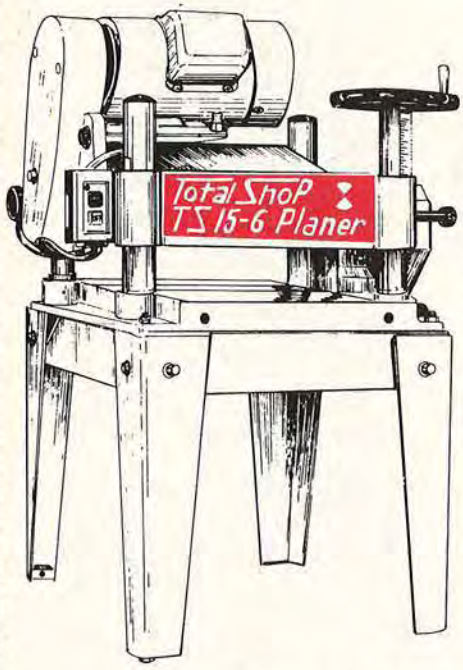

Total Shop®
TS 15-6 Planer

- 110 V or 220 V
- Stand & dust collector available
- 2 HP or 5 HP motor
- 15″ width, 6″ thickness

Attention Shopsmith® Owners: Call today for our accessory brochure and save money.

clip and mail coupon for: Free Informational Kit

Total Shop®

Dept. Q
P.O. Box 16297/Greenville, S.C. 29606

Your Name _____

Address _____

City _____ State _____ Zip _____

Phone _____

☐ Multipurpose tool ☐ TS 15-6 Planer
☐ Video ($20.00 deposit enclosed)

©United Metal Services, Inc.

MoneyMachine.

This revolutionary invention, the *Paralok Table Saw Fence* makes cutting at least *seven times more accurate* than any other fence... much faster... and is super simple to operate.

Time was.

"We spent hours in the shop fighting with our rip fence and usually losing. Finally we retired it to a corner and resorted to a 1"x6" and pair of C-clamps. At least it was accurate. But crude and slow. We remember the test cuts, measuring front, blade and rear... tapping to get everything in place, only to repeat it again for the next cut."

We set out to solve the problem.

Our ideas lead to the invention of the Paralok Fence. It took three years to perfect it. Now it **is** perfect and accurate. How accurate? Accurate in thousands of test cuts to .002" or less. This Paralok Fence saves time and materials and that spells *money*. We call it the *money machine*.

In the two years we've been marketing the Paralok Fence nationwide, we haven't talked to one customer who doesn't agree.

How it works.

The Paralok fence works on the same principle as a drafting table. Super strong aircraft cable (5/64", 49 strand) runs in a closed loop around 6 precision ground ball bearing pulleys located underneath the rails. The aircraft cable is engaged by the fence in both the front and rear. Move the front end 1/64" and the back goes 1/64".

Single handed operation. Lift up the handle and slide the fence down the rails with one hand. Use the combination of the tape mounted on the front rail and the vernier cursor next to the handle to set the fence at intervals of 1/64". You'll march right through your cutting list without having to stop the motor.

Both the front and rear lock. Two hefty locks, each with 750 pounds clamping pressure, independently lock the fence to the front and rear rails without squeezing the rails together. No distortion at the rear, no kickbacks due to binding the material.

Owners tell us.

"I'm a believer, I've had the Paralok on for a week now and we won't part company. The action is smooth, the parallelness is absolutely dead on, and it locks with a commitment to purpose that should be an inspiration to us all." *G. B. Lee Baker, Redmond, Oregon*

"The Fence is incredibly accurate... It has cut the time of any saw work by a measureable amount... I wish we had gotten this fence about four years ago." *Bill Tongate, shop supervisor, Valley Cabinet & Trim, Ridgecrest, California.*

More features.

The Paralok is easy to install, taking about 1½ hours or less. (It can also be mounted with an auxilliary fence.) The Paralok is easy to remove for cross-cuts. It gives you long infeed and outfeed for better control. The fence is always perfectly parallel, even when being reset for the next cut. The anodized aluminimum finish is tough, wear resistant and looks great. Because of such a smooth finish, material *glides* right through.

Fits almost all table saws.

The Paralok fits *Rockwell-Delta, Powermatic, General, Wadkin-Bursgreen, Walker-Turner, Oliver, Jet, Sears Craftsman*, and most others.

The important dimension is the depth of your table saw from front to rear. Then select from rails in six sizes: 4', 5', 6', 6'8", 8', 8'8". That is gross length. You decide how much you want to the right and left of the blade.

Standing behind our fence.

We're so confident you'll be more than pleased we offer a *five year warranty* on parts and labor for defective material or workmanship. And, if you're not satisfied with your Paralok, send it back in 30 days for a full refund.

For more information.

Give us a toll free call. We'll answer any questions and direct you to your nearest dealer (Dealer inquiries invited.) If we don't have a dealer near you yet, you can place your order direct.

We figure the Paralok Fence makes about ten million existing fences obsolete. And the real bonus is that is pays for itself — quick.

Paralok
Quintec Marketing
Post Office Box 736
Newberg, Oregon 97132
Call 1-800-423-9611
Oregon & Alaska call 503/538-1875 collect

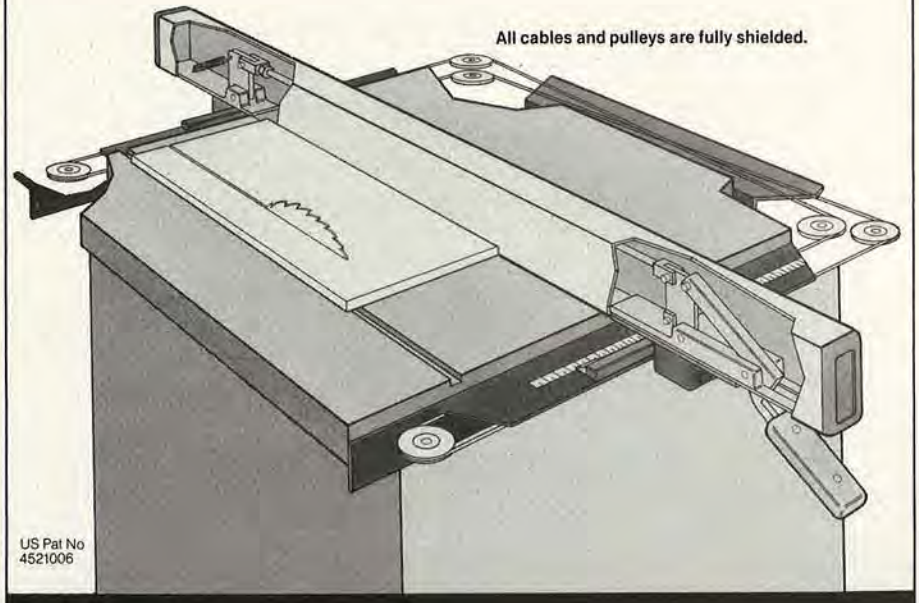

All cables and pulleys are fully shielded.

US Pat No 4521006

Better Homes and Gardens®
WOOD
THE MAGAZINE FOR HOME WOODWORKERS

August 1986 ● Vol. 3, No. 4 ● Issue No. 12

Editorial/Art Staff

Editor **LARRY CLAYTON**
Managing Editor **DAN KAERCHER**
Art Director **C. L. GATZKE**
Design Editor **JAMES R. DOWNING**
Features Editor **PETER J. STEPHANO**
How-To Editor **MARLEN KEMMET**
Project Builder **JAMES E. BOELLING**
Graphic Designer **PERRY A. McFARLIN**
Administrative Assistant **DARLENE REYNOLDS**

Technical Consultants: **GEORGE GRANSETH** Product Testing; **VERNON U. WARD** Collectible Tools; **PAUL L. McCLURE** Wood Technology

Editorial Director **DORIS M. EBY**
Publishing Director **ADOLPH AUERBACHER**

Editorial Services

Executive Director **DUANE L. GREGG**
Director, Editorial Research **C. RAY DEATON**
Administrative Editor **ROSE ANDERSON**

Publisher **JERRY KAPLAN**
New York Advertising Manager **MARK S. HART**
Promotion/Research Director **THOMAS J. TROLAND**
Circulation Director **WILLIAM HUMMEL**
Production Director **DALE SCHENKELBERG**

Magazine Group Officers

Group President **JAMES A. AUTRY**
Group Vice Presidents
Editorial Director **DORIS M. EBY**
Publishing Director **ADOLPH AUERBACHER**

Corporate Officers

Chairman of the Board **E. T. MEREDITH III**
President **ROBERT A. BURNETT**
Executive Vice President—Corporate Services **JACK D. REHM**
Group Presidents: Magazine **JAMES A. AUTRY;** Broadcasting **W. C. McREYNOLDS;** Real Estate **ALLEN L. SABBAG;** Book **FRED STINES**
Vice Presidents: Corporate Relations **DONALD L. ARNOLD;** General Counsel and Assistant Secretary **THOMAS G. FISHER;** Product Development **NEIL KUEHNL;** Corporate Planning **HERB SCHULTE;** Finance **WILLIAM H. STRAW;** Administrative Services **GERALD D. THORNTON**
Secretary **BETTY CAMPBELL MADDEN**
Treasurer **MICHAEL A. SELL**
Controller **LARRY D. HARTSOOK**

Better Homes and Gardens® WOOD — the magazine for home woodworkers (ISSN-0743-894X) is published bimonthly in February, April, June, August, October, and December by Meredith Corporation, 1716 Locust Street, Des Moines, IA 50336. Second-class postage paid at Des Moines, Iowa. Trademark registered in Canada and Australia. Marca Registrada en Mexico. **SUBSCRIPTION PRICES:** One year $18 in the United States and its possessions. Canada and other countries add $6 per year. **POSTMASTER:** Send address changes to WOOD, 1716 Locust Street, Des Moines, IA 50336. August, 1986, Vol. 3, No. 4, Issue No. 12. **CUSTOMER SERVICE:** For service on your magazine subscriptions, including change of address, write to Customer Service Manager ROBERT AUSTIN, P.O. Box 10628, Des Moines, IA 50336. Please enclose a recent address label.

© COPYRIGHT MEREDITH CORPORATION 1986. ALL RIGHTS RESERVED. PRINTED IN U.S.A.

VIKING

SOLID WOOD CLOCK KITS

FAMOUS FOR QUALITY THE WORLD OVER

First Nationwide SALE!

Our Most Popular Kit...

The Wilmington

SOLID ¾" OAK KIT COMPLETE WITH SOLID BRASS MOVEMENT

Save $153 OFF OUR CATALOG PRICE

SALE PRICE INCLUDES: •Solid ¾" Oak Case Kit •Solid brass movement with blue moving moon dial. •Lyre Pendulum •Easy-to-build step-by-step instructions. The Wilmington is the finest value in a grandfather clock anywhere! Every top-quality feature is included. Satisfaction guaranteed or your money refunded. **Includes FREE Vac**

Catalog price was $528 COMPLETE KIT SALE $375

75x16x10 inches, 68 lbs.

FREE $50 POWERFUL SHOP VAC WITH PURCHASE

Order any of the clocks on sale in this ad and receive absolutely FREE this hand utility vacuum. Features: •Made in America •Powerful motor, perfect for workshop, car, kitchen or any home or office cleaning job. •1-year warranty •Complete with 3 tools. •Stores easily in closet or cupboard. Offer good while quantities last—order now!

(Pay only $4 delivery charge)

15½x14x5½ inches, 16 lbs.

Save $50

SOLID WALNUT KIT
English Carriage with solid brass key-wound chiming movement.

Easy-to-build. 15 pieces of carefully crafted American Black Walnut wood. Solid brass chiming movement chimes Westminster every quarter-hour and strikes the hour.

Catalog price was $219
COMPLETE KIT SALE $169
Includes FREE Vac

"Chimes like a full-size grandfather"

Save $84

SOLID ¼" WALNUT KIT
Victorian Teardrop with solid brass movement

This unique kit contains:
•Precision cut walnut parts
•Solid brass movement with dial, hands, pendulum, brass hardware. •Pre-assembled door & crown •Silk-screened glass.

Catalog price was $233
COMPLETE KIT SALE $149
Includes FREE Vac

23¼x13x5½ inches, 16 lbs.

21¼x13¼x5⅝ inches, 7 lbs.

Save $30

Eli Terry

Our newest mantle clock. Solid wood kit with quartz movement & solid brass hardware, brass & wood pendulum.

Catalog price $149
Complete kit sale $119
Includes FREE Vac

PLACE YOUR ORDERS TOLL FREE 1-800-321-1089

ALL MAJOR CREDIT CARDS ACCEPTED.

Want to receive our FREE color catalog mailings? Send your name & address to:

VIKING CLOCK CO., Box 490, Dept. WB486, Foley, Alabama 36536

NOW! REDUCE THE RISK AT YOUR TABLE SAW

WITH THE NEW MOBILE™ SAWING CENTER

OUTFEED ROLLERS
- safe, accurate sawing
- handle panels with ease
- available in 15" and 37" widths
- dual-position table

AND INCREASE FLOOR SPACE

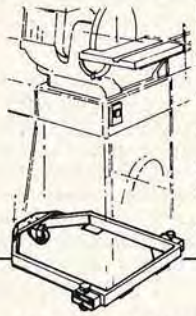

MOBILE MACHINE BASES
- increase shop working area
- maximize usable floor space
- 3 point base will not rock
- locking wheels
- makes machine so easy to use and store
- over 80 standard models

PLANER STAND WITH ROLLERS
- raises planer to proper working height
- provides machine mobility
- five-fold increase in workpiece support
- storage is a snap

NEW

ROLLERTABLE
Rock Solid Support
- adjustable
- portable
- use at any machine

PEDESTAL ROLLER

Discover HTC's many unique products designed only with you, the dedicated woodworker in mind. Find out how you can make your machining safer, increase working area of your shop and accomplish nearly impossible tasks easily, quickly and accurately - **all by yourself!**

CALL TODAY!

HTC PRODUCTS, INC.
120 E. HUDSON S-8
ROYAL OAK, MI 48067
(313) 399-6185

MAKES IT MOBILE

1-800-624-2027 ext. 112

Better Homes and Gardens®

WOOD

AUGUST 1986 **ISSUE NO. 12**

WOOD PROFILE

BEECH: BEAUTIFUL, BOUNTIFUL, BENDABLE AND BARELY KNOWN 27

This plentiful, cabinet-quality hardwood works like hard maple and bends like ash. You'll find it in everything from beer barrels to clothespins.

CRAFTSMAN CLOSE-UP

LENDING A HELPING HAND 28

Don Mostrom works in two worlds. For 3 months each year, he shares his skill in a training program for the disabled. Back in his own studio, he's an accomplished sculptor-turned-woodworker. What makes him tick?

HOMEMADE TOOL

MAKE YOUR OWN PRECISION SCROLL SAW 32

For about $120 (not including the detachable jigsaw that supplies the power), you can assemble this ingenious tool in your own workshop.

FINISHING AND REFINISHING

FABULOUS FINISHES: TOP CARVERS' PROVEN TECHNIQUES 38

Most carving woods are plain-Jane—until a skillfully applied finish brings the project to life. Here's how three top notch carvers work their finishing magic.

JUST FOR KIDS

NO JOB TOO SMALL! TUFF-STUFF TOW TRUCK 42

Need a lift? Then delight a special youngster with this toddler-sized tow truck. It maneuvers with the best of 'em and takes lots of abuse. Best of all, you get a full, 5-year, 5,000-smile warranty.

TOOLS AND TOOL COLLECTING

A GUIDE TO PRESERVING OLD HAND TOOLS 48

Here's advice about restoring that timeworn gem gathering dust on the workshop shelf.

TOOL BUYMANSHIP

POWER MITER SAWS: SUPER-ACCURATE CUTS—AT ANY ANGLE 52

At long last, you can buy a saw that does exactly what you want it to do—make picture-perfect cuts with the flip of a switch. Here are the options and features to look for, plus a buymanship chart.

FROM LOGS TO LUMBER . . . DOWN AT THE OL' SAWMILL 58

Ever wonder what goes on at a hardwood mill? Features Editor Peter Stephano trekked up to the North Country last winter to report on this fascinating operation.

DOUBLE-DUTY TABLE-SAW EXTENSIONS 64

Make your table saw more versatile with these handy, do-it-yourself extensions. You get lots more work surface, and as a bonus, one extension even includes a built-in router table.

5 QUICK 'N' EASY PROJECTS

OAK BREAKFAST TRAY 68

Box joints help make this project as tough as it is eye-pleasing.

ROUTER-SPECIAL TIE RACK 71

Simply make the template, fit your table-mounted router with a flush-trim bit, and rout away.

SANDPAPER STORAGE BIN 72

Quick-grip shelf cutouts and a paper-tearing device mean less fumbling while finishing your projects.

PARROT MAGNETS 73

These birds of a feather are super little gifts. Make a bunch.

BUNNY BOOKENDS 74

Our clever kids' bookends slide on two dowels to help organize a mini library.

SHORT-SUBJECT FEATURES

Editor's Angle 7
Talking Back 8
Shop Tips 14
Wood Anecdote 18
Products that Perform . . . 19
Ask *WOOD* 22
Workshop Mistakes 25
Project Showcase 50
Old Hand Ways 79
Wood-Wise Quiz 83
Associations 85
Drill-Press Project 86
Customer Service 87
Rules for a Clean Shop . . . 93
Bulletin Board 100

Woodworkers' Hardware ORDER FORM

Qty. Total

Note: C = 100

Black Hammer Hinge
$2.70/2 $1.62/2
$11.95/10 $7.17/10
Screws for above are included.

Birch Mug Peg
$.43/ea. $.25/ea.
Birch Shaker Peg
$.47/ea. $.28/ea.

Birch Furniture Spindles
6 inch $.70/ea. $ .42/ea.
9 inch $1.20/ea. $.72/ea.

#S4 Galley Spindle
Birch $.28/ea. $.17/ea.
Oak $.35/ea. $.24/ea.

#S5 Galley Spindle
Birch $.41/ea. $.25/ea.

Wood Wheels
7/8" $7.80/C $4.70/C
1" $11.68/C $6.00/C
1 1/4" $15.00/C $8.00/C
1 1/2" $18.35/C $11.00/C
1 3/4" $26.00/C 15.60/C
2" $32.50/C $19.50/C

#AP1 Axle Peg
Fits 1" to 2" Wheel $6.95/C $4.10/C

Brass Plated Flat Head Wood Screws
(3/8" x #2) $4.17/C $2.20/C
(1/2" x #2) $4.28/C $2.30/C
(1/2" x #4) $4.40/C $2.40/C
(1/2" x #5) $5.03/C $2.50/C
(3/4 x #7) $5.27/C $2.60/C

Screw Hole Buttons
3/8" $3.03/C $1.70/C
1/2" $3.23/C $1.70/C

Dowel Pins 3/8"x2"
$3.08/C $1.80/C

Saw Tooth Hangers
$6.95/C $4.17/C

Brass Plt. Picture Hanger
$7.95/C $4.70/C

Clock Movements w/Hands
Q82 $10.62/ea. $6.48/ea.
$49.50/5 $25.50/5
5" Clock Dial — White Plastic
$2.50/ea. $1.80/ea.

Lazy Susan Bearing
3" $1.15/ea. $ .69/ea.
4" $1.60/ea. $ .96/ea.
6" $2.80/ea. $1.73/ea.

Brass Plated Candle Cup
$5.00/10 $2.80/10
$49.00/C $25.90/C

Two Prong, 6" Brass & Porcelain Hook
$4.95/ea. $2.97/ea.
$45.00/10 $27.00/10

Three Prong, 6" Brass & Porcelain Hook
$8.25/ea. $4.95/ea.
$29.99/4 $18.00/4

Jiggle Eyes
(1/4") $2.45/C $1.40/C
(1/2") $3.45/C $2.00/C
(4/5") $6.85/C $4.10/C

Disk Magnets
$2.98/6 $1.61/6

Note: C = 100

☐ Catalog $1.00 or free with order — Total Order
☐ Minimum Order is $25.00 — MN Res.- 6% Tax

Order Amount :	Shipping :
$25.00 to $49.99	$3.50
$50.00 to $99.99	$4.50
Over $100.00	$5.00

Shipping
Total Enclosed
☐ Visa ☐ Master Card

MONEY BACK GUARANTEE! Alaska, Hawaii, Canada & APO Orders Add $6.00

SIGNATURE
CARD NO EXP DATE
NAME
ADDRESS CITY
STATE ZIP PHONE ( )

MEISEL HARDWARE SPECIALTIES
P.O. Box 258W7, Mound, Minnesota 55364 • (612) 472-5544

RYOBI TOOLS

		List	Sale
S500A	3x5½ Finish Sander	70	41
SU6200	Finishing Sand. ½ Sheet	142	88
B7075	3x21" dustless Belt Sand.	179	116
B7100	3x24" dustless belt Sand.	208	140
B7200A	4x24" dustless Belt Sand.	269	165
D100VR	3/8" VSR 0-1200 rpm drill	91	49
W640	7¼" 13 amp circular saw	158	99
W740	8¼" 13 amp circular saw	171	109
JS60	Jig Saw-Single Speed	172	99
JSE60	Jig Saw-electronic v/speed	198	123
R150	1 H.P. Plunge Router	138	86
R330	2 H.P. Router	220	138
R500	3 H.P. Router	265	163
E3800	Drywall screwdriver 0-4000	126	79
L120U	3⅝" Planer	142	89
BD1020R	3/8" 2-spd Cordless Drill w/free holster-Xtra special buy	148	95
TS251U	10" Mitre Box	300	169
SG1150C	4½" H.D. Mini-Grinder	99	59

YOUR ATTENTION PLEASE!

All Above RYOBI TOOL Prices

Take Additional 10% OFF Sale Prices

MILWAUKEE TOOLS

		List	Sale
0224-1	3/8 drill 4.5A magnum	159	109
0234-1	½ drill 4.5A magnum	159	112
0244-1	½ drill 4.5A magnum	159	115
0222-1	3/8 drill 3.3A 0-100 rpm	146	99
0228-1	3/8 drill 3.3A 0-1000 rpm	129	92
0375-1	3/8 close quarter drill — NEW — 3.5 amp	175	118
0210-1	3/8 cordless drill — NEW — 2 speed	154	95
6539-1	cordless screwdriver — NEW — 190 RPM	84	59
1007-1	½" drill 4.5A D-Hdle	199	145
1107-1	½" drill 4.5A D-Hdle	204	145
3300-1	magnum rt angle drive kit	249	170
3102-1	Plmbrs rt angle drill kit	263	180
1676-1	HD Hole Hawg w/case 2 sp	333	235
5395	3/8 sgle sp hammer drill kt	203	150
5397	3/8 var sp hammer drill kit	208	155
5371-1	HD mag. hammer drill ½"	287	207
5373	HD mag. ham. drill 3/8"	240	175
6511	2 speed Sawzall w/case	181	122
6226	port band saw 2 sp w/case	382	280
6234	TSC band saw port w/case	382	280
6405	8¼" circ. saw 13 amp	179	127
6460	10¼" " 15 amp w/case	349	245
6165	12" Chop saw 15 amp 4200 R.P.M.	285	189
6255	v/sp Jig Saw 3.8 amp	199	140
6245	sgle sp Jig Saw 3.8 amp	175	125
6012	⅓ sheet HD Orb. sander	159	110
6014	½ sheet HD orb. sander	169	112
5660	1½ HP router 10 amp	265	175
5680	2 HP router 12 amp	314	220

DRYWALL SHOOTERS

6753-1	3.5 amp 0-4000 rpm new	115	79
6747-1	4.5 amp 2500 rpm	144	100
6750-1	4.5 amp 0-4000 rpm	129	90

NEW FROM RYOBI

MODEL AP-10 — 10" Surface Planer

WEIGHS ONLY 58 LBS.

LIST 659.00 — SALE 375.00

MILWAUKEE Super Specials!

★ ★ BRAND NEW ★ ★

Model 0212-1 Cordless Variable Speed 3/8" Drill

LIST. . .179.00 SALE. . .125.00

Model 6145 — 4 1/2" Sander-Grinder

LIST. . .139.00 SPECIAL SALE. . .85.00

Go Cordless with MILWAUKEE

#6305 — 6¼" Cordless Circular Saw

12 volt — 1 Hour Charge

Cuts (80) 2x4's (Pine)

List Price 195.00 ★ SALE PRICE 119.00

FREUD SAW BLADES

Univ. Bore — Professional Series

CARBIDE TIPPED SAWBLADES

Item No.	Description	Diam.	Teeth	List	Sale
PS203	Gen'l Purp.	7½"	24	27.24	17.50
PS303	Fine cutting	7¼"	40	32.97	20.50

⅝" Bore — Industrial Grade

CARBIDE TIPPED SAWBLADES

Item No.	Description	Diam.	Teeth	List	Sale
LU72M010	Gen-l Purp.	10"	40	68.58	34
LU81M010	Gen-l Purp.	10"	40	69.30	35
LU73M010	Cut-Off	10"	60	79.65	36
LU82M010	Cut-Off	10"	60	86.40	44
LU84M010	Combination	10"	40	70.99	36
LU84M011	Combination	10"	50	74.51	37
LU85M010	Super Cut-Off	10"	80	110.88	62
LM72M010	Ripping	10"	24	64.85	34
DS 306	6" Dado			139.00	92
DS 308	8" Dado			170.00	105
TR 100	3 blades & Dado set			399.00	255

MAKITA CORDLESS FESTIVAL OF VALUES

Model		List	Sale
4300DW	Jig Saw	158	99
5081DW	3⅜" Saw Kit	174	95
5600DW	6¼" Circular Saw	224	125
9035DW	Finishing Sander	128	73
6010DWK	3/8" Cordless Drill Kit	152	88
6010SDW	3/8" Cordless Drill	84	45
8400DW	3/8" Hammer Drill	188	105
DA3000DW	3/8" Angle Drill	176	98
6010DL	3/8" Drill w/Flashlight	162	89
6012HDW	3/8" 2 spd Driver Drill w/Bat & Metal Case	178	98
DK1002	3/8" Drill w/Flursnt Lt	164	90
6710DW	Cordless Screwdrvr Kit	148	84

DELTA BENCH TOP TOOLS

Model		List	Sale
11-950	8" Bench Drill Press	124	100
28-160	10" Bench Band Saw	158	125
40-500	15" Scroll Saw	105	85
23-680	6" Grinder Bench	62	50
23-880	8" Grinder Bench	99	85

MAKITA TOOLS

		List	Sale
804510	Sander	79	43
9900B	3"x 21" belt sander	198	119
9924B	3"x 24" belt sander	189	130
9924DB	3"x 24" b/sand. w/bag	214	130
9035	⅓ sheet finish sander	79	48
9045B	½ sheet finish sander	156	90
9045N	¼ sht fin. sand. w/bag	158	105
4200N	4⅜ circ. saw 7.5 amp	152	93
5008NB	8¼ circ. saw 13 amp	178	105
5201NA	10¼ circ. saw 12 amp	348	215
4300BV	v/sp jig saw 3.5 amp	192	120
4301BV	orb v/sp jig saw 3.5 amp	208	125
JR3000WL	2 sp recip saw w/case	168	120
JR3000V	vs recip saw w/case	178	120

★ ★ ★ MAKITA TOOLS ★ ★ ★ SPECIAL PROMOTION

LS1000	New 10" Mitre Box	348	198
792210-7A	Carbide Bld for above	45	31
9820-2	Blade Sharpener	244	159
741074-9	60 (coarse) Grdg Whl	33	23
741070-7	1000 (med) Grdg Whl	30	22
741071-5	6000 (fine) Grdg Whl	43	30
1900BW	3¼" planer w/case	154	92
1100HD	3¼" planer w/case	278	160
3608BK	¾ hp router w/case	132	85
3601B	1¾ hp router	168	115
3700B	½ hp trimmer 28,000 rpm	124	82
804530	6" Round Sander	84	48
DA3000	3/8" angle drill	158	105
DP4700	½ v/sp w/rev" 4.8 amp	154	92
HP1030W	3/8 v.s.r. hammer drill w/case	145	98
6300LR	½" angle drill w/rev	229	152
841968-2W	½" s sp. hammer drill w/case	238	150
GV5000	Disc Sander	79	53
6800DB	2500 rpm 3.5 amp	123	79
6800DBV	0-2500 rpm 3.5 amp	133	89
6801DB	4000 rpm 3.5 amp	123	79
6801DBV	0-4000 rpm 3.5	133	89
2030n	12" planer/jointer	2160	1475
2040	15⅝" planer	1780	1195
1805B	6⅛" planer kit w/case	416	265
JV1600	var. speed jig saw	145	89
JV2000	var. speed orb. jig saw	165	100
5005BA	5½" circular saw 8 amp. with brake	154	98
9207SPC	7" var/speed electronic sander/polisher	209	130
9303BH	4½" sander-grinder kit	146	95
4014NV	var/speed blower	128	79

DOWL JIGS

MODEL	DOWL-IT	List	Sale
1000		32.95	23.95
2000		42.95	32.95

RECORD VICES

52D	7" jaw - 8" Opening	69.00	51.00
52½D	9" Jaw - 13" Opening	92.00	76.00

3M Co. Respirators

#8500	Box of 50 - 10.00-Case of 600	89.00
#8560	Box of 15 - 13.50-Case of 180	135.00

buying from Seven Corners Hdw. . . . is a good Rule to follow.

Model	STANLEY	List	Sale
33-116	PL-316 ¾" x16" Rule	15.95	7.50
33-320	PL-320 ¾" x 20C Rule	16.95	7.95
33-425	PL-425 1" x 25' Rule	18.95	8.95
33-430	PL-430 1" x 30' Rule	20.95	9.95

1986 TOOL CATALOG AVAILABLE

Call Toll-Free 1-800-328-0457 — In Minnesota Call (612) 224-4859

4 WAYS TO BUY: CHECK — MONEY ORDER — VISA — MASTERCARD

SEVEN CORNERS ACE HDW. Inc.

216 West 7th St. • St. Paul, MN 55102 • Est. 1933

TOOLS ON SALE™

AMERICA'S LOWEST PRICED TOOLS

★ PLUS — FREE FREIGHT ★

ON EVERY ITEM

SAW-ATHON by PORTER CABLE

#314	4½" Trim Saw	
List 180		SALE 109
#346-1	6½" Top Hdle	
List 161		SALE 100
#617	7¼" Push Hdle	
List 166		SALE 96
#587	7¼" Speedtronic	
List 199		SALE 125
#315-1	7¼" Top Hdle	
List 166		SALE 96
#368-1	8¼" Top Hdle	
List 176		SALE 110

BELT SANDERS by PORTER CABLE

#363 — 4"x 24" w/o Bag

List - 280 Sale - 185

#362 — 4" x 24" w/Bag

List - 295 Sale -198

#503 — 3" x 24" w/Bag

List - 510 Sale - 350

DELTA

#34-410 — 10" CONTRACTORS SAW w/Stand & 1½ H.P. Motor

SPECIAL PRICE 679.00

FACTORY REBATE. 100.00

579.00

FREE DELIVERY TO 48 STATES

SUPER CORDLESS SPECIALS from BLACK & DECKER

Model	DRILL KITS	List	Sale
1930	3/8" rev hi speed	165	110
1950	3/8" High Torque	165	110
5930	Reversible Hammer	179	120
1970	3/8 rev hi torque screwdriver	179	120
1980	Rev/adj. clutch Scrudrill	179	120

BRAND NEW! SUPER SPECIALS from MILWAUKEE

0214-1	3/8" c/less drive/drill	159	109
8975	H.D. heat Gun, 11.6A Low 570°F - High 1000°F	74	49
5920	belt sander 3x24 w/o bag	289	199
5925	belt sander 3x24 w/bag	309	215
5930	belt sander 4x24 w/o bag	299	209
5935	belt sander 4x24 w/bag	319	214

PORTER-CABLE = NEW ITEMS +

Model		List	Sale
655	Drywall Driver 0-4000 Rev	115	85
367	3¼" Plane 6.5A	170	115
5009	Mortise & Tenon Jig	50	34
351	3" x21" Belt Sander	189	125
352	3" x21" Belt Sndr w/bag	199	135
9810	Cordless Screwdrvr kit	175	115
320	Abrasibe Plane 3A	129	91

★ ★ ROUTER RIOT ★ ★ by PORTER-CABLE

Model		List	Sale
100	7/7 H.P. 6.5 amp	141	98
630	1 H.P. 6.8 amp	150	100
690	1½ H.P. 8 amp	194	130
691	1½ H.P. D-Hdle 8 amp	218	145
536	1½ H.P. Speedmatic Double Handle	300	190
537	1½ H.P. Speedmatic Double Handle	315	215
520	3 H.P. Production	460	270
518	3 H.P. Micropressor 5-sp	490	345

TRIMMERS BY PORTER-CABLE

309	3.8 amp laminate trimmer	130	90
310	3.8 amp laminate trimmer	190	135
312	offset base laminate trim	205	140
319	tilt-base laminate trim	215	150

★ X-TRA SPECIALS ★

	MAKITA TOOLS	List	Sale
6010DL	C/less Drill w/flashlight-charger & case	162	90
DP3720	3/8 drill Rev. 0-1800 rpm	90	47
6510LVR	3/8 drill Rev. 0-1500 rpm	116	67
6013BR	½" Drill rev 6 amp.	174	100
5402A	16" Circular Saw-12 amp	468	315
2414	14" Cut Off Saw-13 amp	282	169
3612BR	3 HP Plunge Router	286	175
9401	4x24 belt Sander w/bag	248	160

	PORTER-CABLE	List	Sale
696	H.D. Shaper Table	150	105
695	H.D. 1½ hp Router/Shaper	278	190
399	Drywall Cut-Out Unit	100	70
736	V/Speed *Speedtronic* Band Saw	450	330
7564	½" X.H.D. Drill 8 amp	205	145

	BOSCH TOOLS	List	Sale
1581VS	Top Handle Jig Saw	225	126
1582VS	Barrel Grip Jig Saw	126	118
1604	1¾ H.P. Router	199	118
1942	Heat Gun 650°-900°	99	85
1272	3x24" Belt Sander	259	159
1272D	3x24" Belt Sander w/bag	274	169
1273	4x24" Belt Sander	274	169
1273D	4x24 Belt Sander w/bag	289	179

	DELTA	List	Sale
34-010	Motorized Mitre-Box	231	149

★ NEW LOW PRICES ★ PONY CLAMP FIXTURES

Model		List	Sale	Lots of 12
#50	for ¾" Black Pipe	11.23	7.15	79.00
#52	for ½" Black Pipe	9.36	6.10	67.50

JORGENSEN HAND SCREWS

Model	Jaw Length	Open Cap.	List	Sale	Box of 6
#5/0	4"	2"	11.59	7.25	39.15
#4/0	5"	2½"	12.45	8.10	43.75
#3/0	6"	3"	13.36	8.50	45.95
#2/0	7"	3½"	14.36	8.95	48.35
#0	8"	4½"	15.97	9.95	53.75
#1	10"	6"	18.25	11.35	61.25
#2	12"	8½"	20.94	13.60	72.95
#3	14"	10"	26.56	16.75	91.35
#4	16"	12"	34.55	23.75	128.25

JORGENSEN BAR CLAMPS STYLE 37 — 2½" Throat ¼" x ¾"

Model	Jaw Length	List	Sale	Lots of 6
#3705	6"	7.88	5.50	29.70
#3712	12"	8.73	5.95	32.13
#3718	18"	9.64	6.95	37.53
#3724	24"	10.54	7.35	39.69
#3730	30"	11.76	8.25	44.55
#3736	36"	12.85	8.95	48.33

Who Has The Saws That Cut It Across The Board?

***BLACK & DECKER** of course!!!*

Model	WORM DRIVE SAWS	List	Sale
3050	6½" 12 amp - 4600 rpm	247	169
3051	7¼" 13 amp - 4300 rpm	232	149
3052	8¼" 13 amp - 4300 rpm	247	169
	SUPER SAWCATS		
3047-09	7¼" w/brake - 12.5 amp	226	149
3048-09	8¼" w/brake - 13 amp	240	155
	BUILDERS SAW CAT		
3030	7¼" 13 amp - 5800 rpm	155	100
3035	8¼" 13 amp - 5800 rpm	175	125
3034	7¼" 13 amp - 5800 rpm	162	115
3033	6½" 13 amp - 5800 rpm	162	115
	JIG SAWS		
3157-10	var/sp orb action d/hdl	174	115
3153-10	var/speed 4.5A 0-3100	158	105
3159-10	2/sp orb action barrel grip	178	120
	CUT SAW KITS		
3103	2 sp 6 amp-2400 strokes	163	100
3105	v/sp 6 amp-2300 strokes	170	110
3107	v/sp orb 6A 0-2300 strokes	183	119
4300	Drill Bit Sharpener	289	205
1321	½" drill 450 rpm 6 amp	175	115
4010	Palm Sander	80	48
4015	½ Sheet Finish Sander	160	105
	DRYWALL GUNS		
2034	v.s.r. 0-4000 rpm	121	79
2037	v.s.r. 0-4000 rpm	139	89

"Door Openers" from MAKITA

9501B	4" Grinder Kit	119	55
2708	8¼" Table Saw	348	199
5007NB	7¼" Circ. Saw	158	94

MILWAUKEE BUY OF THE YEAR

Model 6365 — 7¼" Circular Saw

List $159.00 Sale $99.00

Lots of 3 — $289.00

***Brand New* • PORTER CABLE**

Model 7548 Top Hdle Jig Saw

LIST 199 — SALE 129.95

Model 7648 Barrel Jig Saw

LIST 199 — SALE 129.95

PORTER-CABLE

9548	HD v.s bayonet saw w/case	255	169
9627	2 sp. tiger saw kit 8 amp	193	130
9629	V.sp. tiger saw kit 8 amp	204	135
505	H.D. ½ sheet finish sander	175	100
330	spd bloc sander ¼ sheet sz	87	54
304	Professional 7" disc sander	169	120
305	Professional 7" polisher	169	120
7511	3/8" xtrahvy v.s drill 5.2 amp	164	115
7554	½" xtra hvy drill 8 amp	210	150
9652	Versa-Plane Kit	419	285
9118	Porta Plane Kit	289	190

DRYWALL SHOOTERS

7544	5.2 amp — 2500 rpm	158	105
7545	5.2 amp — 0-2500 rpm	158	105

AEG POWER TOOLS

Model		List	Sale
EZ 501	C/less Scrwdrvr Brand New	59	35
EZ 502	C/less Scrwdrvr-190 rpm	98	52
EZ 505	C/less Drill Driver	139	79
EZ 506	C/less Electronic Dri Drvr	159	94
EZ 581	C/less Caulk Gun var.sp	179	106
SCR1E	Drywall Screwgun 0-2000	125	74
SCR11E	Drywalll Screwgun 0-4000	125	74
BE8RL	3/8" var.sp drill 3.8 amp rev	86	51
BE10RL	3/8" var sp drill 5 amp rev	125	74
SBE401RL	3/8" Ham Drill v.sp h.d	88	52
SE2E13RL	½" Ham Drill 2 sp h.d	169	101
TC25E	Tech Driver v.sp 5 amp	150	89
PC70	7¼" Circular Saw 12 amp	157	93
VS130	Orb Sndr 20,000 OPM ⅓ sh	75	48
VS260	Orb Sndr 25,000 OPM ½ sh	156	88
VSS260	Orb Sndr 25,000 OPM w bag	189	118
Hbse75S	Belt Sander v.sp 3" x 21"	199	118
BSPE60	Jig Saw Orb v.sp 4.6A w case	214	127
RSK600	Recip Orb Saw 10 amp	229	136

ROTARY HAMMERS

PHE 16RL	3.8 amp 5/8" capacity in concrete	269	175
PH 210	5.2 amp ¾" capacity in concrete	398	260
PHE 20	Same as above — except var.sp 0-750	418	270
PHD 26	6.3 amp 1" capacity in concrete	495	320
PH 38	7.5 amp 1½" capacity in concrete	549	355

All above complete with cases

SKIL TOOLS

		List	Sale
551	5½" Circ. saw 6.5A	99	73
77	7¼" Worm Saw	240	135
367	6½" Worm Saw	239	135
825	8¼" Worm Saw	270	165
807	7¼" Skilsaw 13A-Super	153	100
808	8¼" Skilsaw 13A-Super	172	110
2016-02	3/8" Cordless Drill complete W Charger, Case & 2 batteries	199	95

THE EDITOR'S ANGLE

LOOK WHAT RUSS OLSON BUILT FOR HIS GRANDDAUGHTER, LIZZIE!

In the two-plus years I've been associated with *WOOD* Magazine, I've had an abundance of satisfying moments. I'll always remember, for example, the day I heard the long-awaited news that the company had approved the idea for the magazine. Then there was the morning, after several months of gathering material, writing, editing, and otherwise sweating blood, I saw the very first issue of the magazine. What a thrill! And later came the news that the magazine had grown from 150,000 subscribers to 350,000. I could go on and on, but suffice to say that *WOOD* has been this editor's dream come true.

Perhaps the best part of this dream-come-true story, though, involves you the reader. We get dozens of letters a day, and the staff and I value every one of them. Your response has been absolutely terrific! When we do a feature article or a project plan that you particularly like, you take the time to drop us a nice note. Even when we goof on a dimension or a fact occasionally, rather than slap our hands, you offer helpful comments. And some of you, such as Russ Olson, from Barron, Wisconsin, whose beautiful bentwood sled project appears above, even share with us snapshots of the projects you have built using plans from the magazine.

Thanks for the support, encouragement, tips, comments, and suggestions you've given us so far. We appreciate your input, and I want you to know that you've really got us motivated to do an outstanding job for you.

Larry Clayton

Print this article

A NEW **HEGNER**

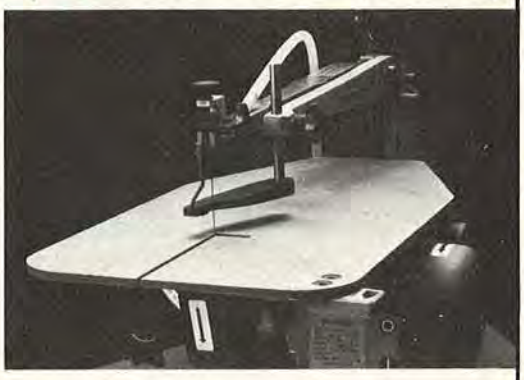

Great News! The HEGNER Multimax-2, recognized as the world's leading scroll saw, has just become better! The NEW Multimax-2 is equipped with a 60% larger worktable! Add HEGNER's known reputation for superior performance and reliability, and you have a scroll saw that stands apart from all others!

Call or write for details on AMI's HEGNER Saws, Lathes or FELDER Systems today.

AMI — because you never regret quality!

ADVANCED MACHINERY IMPORTS, LTD

AMI, Ltd.
P.O. Box 312, Dept. 84
New Castle, DE 19720
302 • 322 • 2226

FINISHING SUPPLIES!!

If you have been looking for professional wood finishing supplies you'll appreciate our new catalog. It contains everything for wood finishing including a special section devoted to time tested finishing information. Select from a complete line of fillers, sealers, touch-up items and specialty products including:

- ☐ VARNISHES ☐ JAPAN COLORS
- ☐ SHELLACS ☐ FRENCH POLISH
- ☐ MUSICAL INSTRUMENT FINISH
- ☐ BURN-IN STICKS ☐ LACQUERS
- ☐ ANILINE DYE COLORS

We're proud to offer these fine finishing products. Because as woodworkers ourselves, we appreciate the difference a fine finish can make.

To order your catalog, send $2.50 to

Wood Finishing Supply Co., Inc.
Department 23
1267 Mary Drive, Macedon, N.Y. 14502

*SPECIAL SUMMER $2.00 OFF SALE — SEE BELOW
CARBIDE TIPPED ROUTER BITS · PROFESSIONAL PRODUCTION QUALITY
SPECIAL OFFER — SAVE 50%-75% BELOW COST

1000's SOLD TO READERS OF FINE WOODWORKING

BEST CUT BEST PRICE	ITEM NO.	DESCRIPTION	RADIUS	LARGE DIAM.	CUTTING LENGTH	PRICE
		COVE				
	#01	1/4" R	1/4"	1"	1/2"	$13.00
	#02	3/8" R	3/8"	1¼"	9/16"	14.00
	#03	1/2" R	1/2"	1½"	5/8"	15.00
		ROUND OVER				
	#04	1/4" R	1/4"	1"	1/2"	15.00
	#05	3/8" R	3/8"	1¼"	5/8"	16.00
	#06	1/2" R	1/2"	1½"	3/4"	19.00
		ROMAN OGEE				
	#07	5/32" R	5/32"	1¼"	15/32"	18.00
	#08	1/4" R	1/4"	1½"	3/4"	20.00
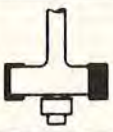	#11	3/8" RABBETING	Deep 3/8"	1¼"	1/2"	14.00
	#09	1/8" (KERF) SLOT CUTTER		1¼"	1/8"	14.00
	#10	1/4" (KERF) SLOT CUTTER		1¼"	1/4"	14.00
	#12	45° CHAMFER	45° Angle	1½"	5/8"	15.00
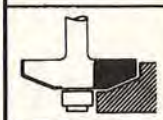	#15	RAISED PANEL	20° Angle	1-5/8"	1/2"	25.00
		DOVETAIL BITS				
	#16	3/8" DOVETAIL	9°	3/8"	3/8"	7.50
	#17	1/2" DOVETAIL	14°	1/2"	1/2"	8.50
	#18	3/4" DOVETAIL	14°	3/4"	7/8"	10.50
		CORE BOX (ROUND NOSE)				
	#19	3/8" CORE BOX	3/16"	3/8"	3/8"	11.00
	#20	1/2" CORE BOX	1/4"	1/2"	11/32"	14.00
	#21	3/4" CORE BOX	3/8"	3/4"	5/8"	18.00
		GROOVE FORMING OGEE				
	#22	1/2" GROOVING OGEE		1/2"	3/8"	16.50
	#23	3/4" GROOVING OGEE		3/4"	7/16"	21.00
	#24	1/4" Straight Bit		1/4"	1"	7.00
	#25	5/16" Straight Bit		5/16"	1"	7.00
	#26	3/8" Straight Bit		3/8"	1"	7.00
	#27	1/2" Straight Bit		1/2"	1"	7.00
	#28	3/4" Straight Bit		3/4"	1"	10.50
	#13	1/2" FLUSH TRIM		1/2"	1"	8.50
	#14	3/8" KEY HOLE (This Bit only HSS)	CUTS 3/8" KEY HOLE FOR FLUSH MOUNTING PICTURE FRAMES, ETC.			8.50

WHEN ORDERING ANY 3 OR MORE, DEDUCT $2.00 EACH
ALL PRICES POSTAGE PAID *OFFER EXPIRES 8-25-86

- Professional Production Quality
- 1/2" Ball Bearing Pilot
- 1/4" Diameter Shanks x 1¼" Long
- One Piece Construction
- Two Flute Thick High Quality Tungsten Carbide Tips

To order by Master Charge or Visa Toll Free
7 Day — 24 Hour Order Service Call
1-800-523-2445 Ext. 56 (in PA 1-800-346-7511 Ext. 56)
or send check to: **MLCS Ltd., Box 53D, Rydal, PA 19046**

TALKING BACK

We welcome comments, criticisms, suggestions . . . even an occasional compliment. The volume of mail we receive makes it impossible to answer every letter, but we promise to do our level best. Send your correspondence to: Letters Editor, Better Homes and Gardens® *WOOD* Magazine, Locust at 17th, Des Moines, IA 50336.

SMOOTH ROUTING WITH SILICONE SPRAY

In reference to the article on "Applying Plastic Laminates" in the April, 1986 issue of *WOOD*: When using a flush-trimming router bit with ball bearings, I use a silicone spray on the bit and on the piece being cut. I spray the bit about every 3′ of cut. This slows your time down, but you will never have a clogged bit to stop and clean. I have cut about 500′ of edge and have never disassembled my ball bearings on the bit to clean them.

—Tony Spulnick, Albany, N.Y.

Thanks for the tip, Tony! When we researched this article, we talked to several people who install laminate professionally. We were quite surprised when we found out that most of them use inexpensive solid-carbide router bits and lubricate the laminate with petroleum jelly.

WOODWORKERS' GEOMETRY, LESSON TWO

There's always an easier way! Several readers contacted us to share their method of finding the center of a circle ("Ask *WOOD*," April, 1986, p. 83). The method that seemed the simplest to us goes like this:

Use a measuring tool or any object with a perfect 90° outside angle (a business card, a framing square, or whatever—depending on the size of the circle). Lay the corner of the tool anywhere on the circumference of the circle and mark the two intersections as shown in the drawing.

Repeat this step with the corner placed at any other point on the circumference of the circle. Then draw the lines as shown, mark the intersection, and you're all set for business!

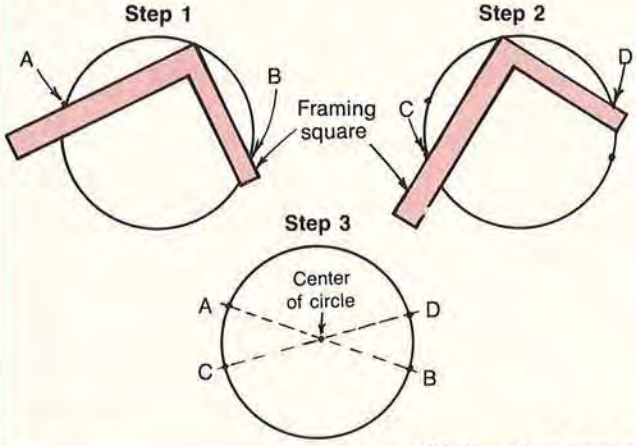

Continued on page 12

As easy as 1, 2, 3...4 and 5.

1 It's a 10" Table Saw with 3-1/4" depth-of-cut and huge 50" ripping capacity.

2 It's a 16-1/2" Vertical Drill Press with locking quill feed for accurate depth control.

3 It's a Horizontal Boring Machine that makes doweling operations a snap.

4 It's a 34" Lathe with 16-1/2" swing capacity for turning table and chair legs, or large bowls.

5 It's a 12" Disc Sander with 113 sq. in. of sanding surface to reduce stock up to 6" thick in a single pass.

The MARK V combines these five major power tools in one space-saving, economical unit. You can perform change-overs in less than 90 seconds.

Plus, the MARK V's 5-in-1 versatility and built-in accuracy make it easy to achieve professional results on all your projects.

The MARK V is the tool to start with...the system you grow with. You'll find a full range of MARK V Accessories to help you do the most sophisticated woodworking operation with ease.

The Shopsmith® Difference

With Shopsmith you get a dedication to woodworking, education, and buyer protection. We believe in the virtues of quality, value, pride and craftsmanship, which show in our educational training and products.

Your Special "Bonus"

Learn how the MARK V can help you do more projects more professionally. Send for your FREE MARK V Information Kit today! Included in the kit is *How To Determine Your Best Power Tool Buy.*

Phone Toll Free: 1-800-228-1020

In Nebraska: 1-800-642-8788

Shopsmith Inc.

For better woodworkers and those who want to be.

6640 Poe Avenue
Dayton, Ohio 45414-2591

Quality woodworking tools made in the U.S.A.

© Shopsmith, Inc., 1985
Shopsmith® is a registered trademark of Shopsmith, Inc.

Mail this valuable coupon TODAY!

☐ **YES!** Please send me a Free MARK V Information Kit including the informative booklet *How To Determine Your Best Power Tool Buy.* I understand I am under no obligation.

Name _____

Address _____

City _____

State _____ Zip _____

Date _____ Initial _____

☐ I currently own a Shopsmith power tool

Dept. 378Y

TOOL CITY
TOOL CITY
BEATS ANY AD PRICE THIS ISSUE
FREIGHT PREPAID (USA)

SAVE 25 TO 60%

CABINET MAKERS
FREUD CABINET ROUTER BIT SET
1 Door Lip
1 Reversable Glue Joint
1 Raised Panel
2 Reversable Stile & Rail Set
LIST $342.00
SALE PRICE $239.00

FREUD SAW BLADE SPECIALS

FREUD CARBIDE—TIPPED SAW BLADES
10" x ⅝" Bore

No.	size	teeth	use	list	sale
LU72m10	10"	40	general	$68.55	34.50
LU73m10	10"	60	cut-off	79.65	34.00
LU82m10	10"	60	cut-off	86.40	42.00
LU84m10	10"	50	comb.	74.51	35.00
LU85m10	10"	80	cut-off	110.88	59.95
LM72m10	10"	24	ripping	68.55	34.00

ALL OTHER FREUD SAW BLADES PHONE FOR SALES PRICES

FREUD CARBIDE DADO'S

D530	6"	–	Dado	139.00	92.00
D530	8"	–	Dado	179.00	99.00
AD800	8"	Adj.	Dado	99.00	44.00

FREUD

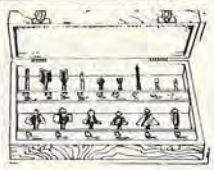

FREUD CARBIDE ROUTER BIT SETS
Both come with wooden case

	List	Sale
15pc set	299.00	134.00
26pc set	449.00	336.00

ALL FREUD ROUTER BITS & SHAPER CUTTERS 25% OFF

SCHLAGRING FORSTNER BIT SETS
Both come with wooden cases

7pc	set	¼"-1"	49.00
15pc	set	¼"-2"	199.00
7pc	Bradpoint drill set		12.95

SENCO'S NEW SFNI
Finish Nail gun shoots 1"-1¾"
Reg. 304.50 Sale 269.00
Call for BIG DISCOUNTS on other SENCO Nail guns & fastners

BIESEMEYER RIP FENCES

BIESEMEYER RIP FENCES

28"	Homeshop	195.00	52"	Commercial	295.00
40"	Homeshop	199.00	62"	Commercial	322.00
52"	Homeshop	249.00	98"	Commercial	399.00

CALL FOR OTHER BIESMEYER PRODUCTS
Paralock Saw Fence 389.00

LEIGH DOVETAIL JIGS

TD514	12"	Through Dovetail Jig	135.00
TD514L	24"	Through Dovetail Jig	209.00
D1258-12	12"	Half Blind-Through	259.00
D1258-24	24"	Half Blind-Through	339.00

Makita's New varible speed cordless drill
7.2 volt, 0-0600 RPM
3 hour charge, comes with charger
Mdl # 6070DW
List 98.00 Introductory Sale 69.00

⅜" CORDLESS DRILL, VARIABLE SPEED, REVERSIBLE
Model 6070DW

3½" Cross Vise
Slides 2 ways
excellent for Drill Presses
Sale 49.00

RECORD NO. 07 22" jack plane
Reg 99.00 Sale 64.95

WE HAVE EVERY TOOL YOU NEED

10" or 12" Contractor's Table Saw
cast iron extensions and top
steel stand included
2 HP ball bearing motor
jet-lock type rip fence
Reg 695.00 Sale 399.00 complete

Bosch 7¼" circular saw
Mdl # 1651
Super Heavy Duty
Reg 179.00 Sale 99.00

PHONE FOR SALES PRICES

NEW FREUD HAND SAWS
Made in England

	Sale
Rip	19.95
Panel	18.95
Tenon	23.95
Dovetail	20.95
Gents	7.95
Set of five above 79.95	

ERMACO Nail-Gun Compressor, 1 hp.,$289
145 PSI, 4.5 CFM 2.5 gallon tank. Only weighs 52 LBS.

TOOL CITY
14136 E. FIRESTONE BLVD.
SANTA FE SPRINGS, CA. 90670
(213) 802-1236 OPEN MON - SAT 8 AM - 5:30 PM

CALL TOLL FREE
INSIDE CALIF 1-800-826-7819
OUTSIDE CALIF 1-800-423-7899
VISA ■ ■ PERSONAL CHECK ■
FREE WITH ORDER - TOOL CITY CATALOG

TALKING BACK

Continued from page 8

WHAT POWER TOOLS TO BUY

As a beginner in the field of home woodworking, I would appreciate your assistance in advising the type of power equipment that would be best suited for my shop. The size at the present time is 25′ long and 8′ wide. I already own a radial-arm saw.

—Ray Amon, Olney, Md.

Gulp! Lots of people ask us this question, and we know we're going to step on some toes. However, in the firm belief that some answer is better than no answer at all, here's our list: 1) We'd normally opt for a table saw first, but in Ray's narrow shop, a radial arm makes sense; 2) a router; 3) router table; 4) stationary sander (belt or disk); 5) jointer; 6) band saw; 7) drill press; 8) lathe (optional); and 9) scroll saw (again, optional).

Remember that your choices depend on your particular woodworking interests, skill level, shop space, and—last, but not least—budget. We're sure these choices will stir up some response—so let's hear from you readers on this subject. We'll share your choices in an upcoming issue.

TIME OUT FOR SAFETY

We applaud *WOOD* Magazine for a most interesting article, "Time Out for Kids," in the April, 1986 issue. While the article covered the "creativity principles" for youngsters rather well, it also illustrated two unsafe practices when using hand tools. The photo on p. 67 of Jim Woodruff and his grandchildren illustrates the wrong type of hammer to drive nails. . . . Peen hammers are designed and intended for other purposes. Equally as important is the wearing of safety goggles whenever using hand tools. This safety precaution applies to the tool user, the instructor, and other bystanders.

—Richard C. Byrne, Executive Director, Hand Tools Institute, Tarrytown, N.Y.

We appreciate the safety reminders very much, Richard!

JUST WONDERING. . . .

As an ardent reader of your publication, I notice you've used various wood types in the title of your magazine on the cover since Issue No. 3. I'd like to compare my identification list with that of your staff. Can you please supply me with a list?

—R. S. Goldman, St. Louis, Mo.

We turned Mr. Goldman's letter over to WOOD *Magazine Art Director Lee Gatzke for reply. (Lee chooses the woods that appear on our covers, based in part on the colors in the cover photo.) Fortunately, Lee's good at record-keeping. Here's the list: Issue No. 3, Carpathian elm burl; No. 4, walnut burl; No. 5, mahogany; No. 6, cherry; No. 7, red oak; No. 8, pecan lumber; No. 9, pecan veneer; No. 10, walnut burl; No. 11, ash veneer; this issue, Ponderosa pine.*

QUALITY AND AFFORDABILITY

At Foley-Belsaw We Still Use The Words Together!

Since 1926 Foley-Belsaw Sawmills and Wood Planers have meant American Made Quality and Affordability. Our new line of Power Tools continues in this same tradition. Power Tools made with sturdy castings and heavy-duty bearings that you can build a business on but priced for your home workshop.

GUARANTEED FOR LIFE

Guaranteed to last a lifetime.... because it's built to last a lifetime. The entire new line of Foley-Belsaw Power Tools carries a limited lifetime warranty. Receive full details when you send for your free Booklet on Power Tools For Profit... just clip the coupon and mail today.

PLUS 30-DAY TRIAL

All Power Tools are available on a 30-Day "No Risk" Trial. Foley-Belsaw's Hands On Trial is your assurance that our products will faultlessly perform every function we claim to your satisfaction. Take 30 Full Days and use our equipment as much as you wish... put it through its paces.

FINANCING AVAILABLE

All Foley-Belsaw equipment is available on our Easy Payment Plan, tailored to fit any budget. Our ironclad warranties combined with the confidence to finance our own equipment at low interest rates assures you of Quality and Affordability.

1926 60TH YEAR 1986 FOLEY BELSAW

When you buy Foley-Belsaw you buy "Direct From the Factory". You buy American made precision and quality, guaranteed for life, at home workshop prices. You also get a Full 30-days to prove that our products perform... and perform they will or we simply return your money, no questions asked. So if you'd like to get the most for your money, take a good look at the Foley-Belsaw line of Power Tools and use our "Tailored to Fit any Budget" Easy Payment Plan... just clip the coupon below and Mail Today!

MODEL 490

TABLE SAW

We invite you to compare the quality of our saw to those costing $1200, $1500 and even more. You'll find the same heavy-duty castings and precise engineering, but with Foley-Belsaw you'll pay hundreds less. The Model 490 10" Table saw is built to perform like the big boys and gives a depth of cut up to 3½". Many new design features such as our Accu-Fence System, extra stable hextal stand and Poly-V-Belt drive put the Model 490 one step ahead. There's no reason to search further for the ideal answer to your sawing requirements.

MODEL 435

SCROLL SAW

Like Scroll Saws of old, our frame is solid cast iron as is the big 12" x 12" work table. The extra large 20" throat and 2" depth of cut easily handle the big jobs... with smooth as silk cuts in all types of woods. Features like a variable speed motor, and a drive mechanism which is submerged in a constant oil bath, provide the smoothest possible power transmission. The Model 435... a professional quality Scroll Saw built for a lifetime of service.... yet priced for the home workshop.

MODEL 480

BANDSAW

For the woodworker who demands professional results! Features like a solid cast iron table, solid cast trunions, heavily ribbed frame castings, provide plenty of strength for a lifetime of vibrationless precision. Check the many features of the Model 480 14" Bandsaw and you'll discover... no other Bandsaw in its class can compare.

FOLEY BELSAW

FOLEY-BELSAW CO.
42003 FIELD BLDG.
KANSAS CITY, MO 64111

☐ **YES,** please send me information on your complete line of Power Tools and full details on how I can qualify for a 30-Day Trial right in my own shop. I understand there is no obligation.

NAME_____

ADDRESS_____

CITY_____

STATE_____ ZIP_____

FOLEY BELSAW "Power Tools For Profit"

SEND FOR FREE BOOKLET

TIPS FROM YOUR SHOP (AND OURS)

Print this article

In woodworking, as in life, no one knows it all. But through experience, we all discover—or stumble onto—better, safer, faster, or easier ways to do things. When we devise interesting tips or techniques, we'll share them with you in this column. And when you send us your favorites, we'll pay you $25 for each submission we publish. No shop tips can be returned. Mail your tips to:

Shop Tips
Better Homes and Gardens®
***WOOD* Magazine**
Locust at 17th
Des Moines, IA 50336

Picture-perfect storage for Forstner bits

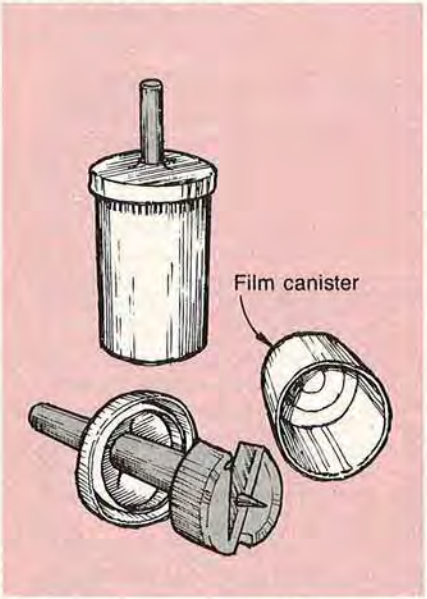

Forstner bits cost too much to leave them unprotected in toolboxes. Yet you can't store them the way you can other drill bits because their shape is too awkward.

TIP: Plastic 35 mm film canisters make inexpensive protectors for Forstner bits up to 1⅛" diameter. (They're free, too.) Slip the shaft through a hole cut in the canister lid and store as shown. In addition, the lid makes a good depth gauge. Use masking tape on the canister to identify the bit diameter. You can protect router and specialty bits with the same technique.

—Eddie Tomlinson, Alcolu, S.C.

Rescue a hinge

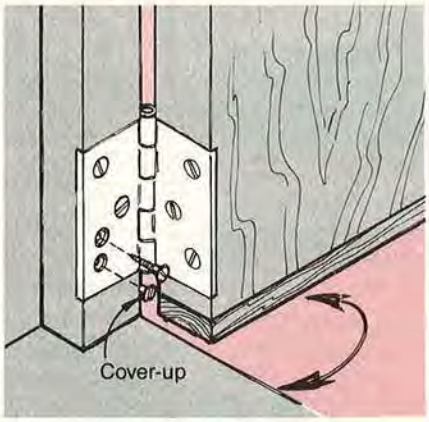

It's easy for a project to come unhinged when one or more of those long wood screws breaks off.

TIP: Don't drive a new screw at a different angle or even consider moving the hinge. Instead, drill and countersink a new hole next to the troublesome hole in the hinge. Drill a pilot hole and wax or soap the new screw before driving it. If you use brass screws, first cut new thread with a steel screw. Snip off a shortened, properly sized screw and drive it into the defective hole to cover up.

—William Cox, Rolling Meadows, Ill.

"Nutty" idea for plugging caulking tubes

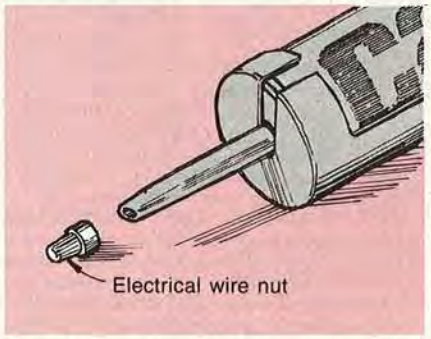

Each time you grab a partially used tube of caulk or adhesive, the contents has hardened in the nozzle.

TIP: Large electrical wire nuts with soft "skirts" are ideal for temporarily sealing caulk and adhesive tubes. Avoid using hard plastic wire nuts that may weaken in the solvents used to make adhesive; blue or gray 3M wire nuts are suitable.

—Ron Steelman, St. Paul, Minn.

Low-cost grinder

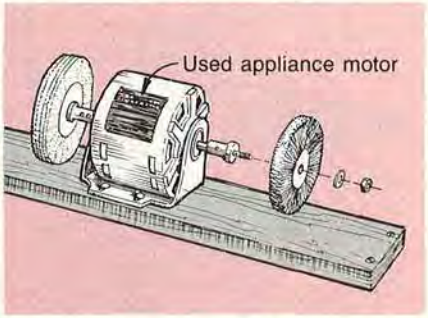

The cost of a new grinder keeps many woodworkers from purchasing this practical tool.

TIP: Save a few dollars and pick up a used washer or dryer motor from an appliance repair service or salvage yard. (Try to find a motor with two shafts.) Mount the motor to a stand or a wood base, add an electrical switch, and attach a work arbor (available at hardware stores) to each shaft. You can reverse the wiring on most motors to create your own grinder or buffer.

—Harley Refsal, Decorah, Iowa

How to "bag" an unpleasant task

It's an unsettling job to empty the canister of a shop vacuum. Unfortunately, a lot of dust escapes into the room.

TIP: After you empty the vacuum the next time, line the canister with a plastic garbage bag, fold the edge of the bag over the canister rim, and clamp on the lid. When the canister is full, you simply tie the bag shut and neatly dispose of all the dust with no mess.

—Richard Tomlison, Milroy, Pa.

Continued on page 16

Your home workshop can PAY OFF ... ...BIG!

This One Low-Cost Power Tool—

SAWS to desired Width...
PLANES to desired Thickness...
MOLDS all popular Patterns...

—All at once or separately...All By Power Feed!

The Only Complete Workshop Tool Of Its Kind In The World!

From the Day It Arrives... the Planer will make and save you money. With shortages and inflation driving lumber prices sky-high, this versatile power tool quickly pays for itself by easily converting low cost rough lumber into high value finished stock. In just one pass turn out your own quarter-round, door and window stop, casing, tongue-and-groove... all popular patterns. Other operators are making cases for grandfather clocks, furniture, picture frames, bee hives, bed slats, surveying stakes... all kinds of millwork.

Built For Pros... Priced For Home Craftsmen... it is engineered and built to industrial standards, but factory-direct selling keeps the price low. Handles tough oak and walnut as easily as pine, and so simple to operate even beginners with no experience can use it.

Start Your Own Business! Earn Extra Income Right At Home.

With just this one low cost power-feed machine in a corner of your garage or basement, you're set up to supply lumberyards, cabinetmakers, carpenters, remodelers, contractors and hobbyists in your area with custom-planed lumber, trim, molding... ALL of their millwork requirements. You can supply picture molding to art shops, hardware and department stores, or sell direct to framing shops. All standard patterns are available from stock, or we'll custom grind a knife to your own special design or sample.

Try The Foley-Belsaw In Your Own Shop On Our

30-DAY FREE TRIAL OFFER

Mail Coupon Below For Complete Details!

You Take* NO RISK! *The Planer/Molder/Saw Is Backed by Our Exclusive 100% Guarantee of Satisfaction:

• "Try the Foley-Belsaw in your shop for a full 30-Days and put it to work for you. Give it a thorough test and make it prove that it can do everything we say it will... use it just as much as you want. Then if you are not completely satisfied, just send it back and we'll return every penny you sent. And YOU are the sole judge! There are no questions asked... there are no fine print 'use' charges. Our flat guarantee is that YOU must be 100% satisfied or you get your money back."

FREE BOOKLET!

Get FREE Book with facts and full details ... RUSH COUPON TODAY!

Just Mail Coupon ... NO OBLIGATION and NO SALESMAN Calls!

ACT NOW! *Coupon Brings Full Details!*

If coupon has been removed, just send postcard with name and address to:

FOLEY-BELSAW CO.
90836 FIELD BLDG.
KANSAS CITY, MO 64111

Does The Foley-Belsaw Pay? YOU BET!

READ WHAT OWNERS SAY:

A Good Investment • Robert Sawyer, Roseburg, Oregon: *"I believe that the Foley-Belsaw is the best investment I ever made. I've been a planer man for years and am now retired. The Foley-Belsaw has earned me $60,000 extra income in the past eleven years."*

Pays For Itself: • R.S. Clark, Springfield, Ohio: *"I bought a batch of walnut in the rough, and after planing it on the Foley-Belsaw I figured up the money I saved. It was enough to pay for two-thirds the cost of the Planer. It really does a good job."*

More Than Expected • Stephen Schultz, Orangeville, Penna.: *"This machine pays for itself by making money out of scrap boards. It is a very well built machine and I confess it is more than I really expected for the price. It does everything you say it will."*

... And Foley-Belsaw Is The Choice Of Professionals:

"I recommend Foley-Belsaw Planer-Molder-Saw as the most useful shop tool any craftsman could own. We use one every day in the Workbench model shop, and couldn't get along without it."

JAY HEDDEN — Editor WORKBENCH Magazine

FOLEY BELSAW

FOLEY-BELSAW CO.
90836 FIELD BLDG.
KANSAS CITY, MO 64111

☐ **YES**, *please send me the FREE Booklet that gives me complete facts about your Planer-Molder-Saw and full details on how I can qualify for a 30-Day Free Trial right in my own shop. I understand there is No Obligation and that No Salesman will call.*

NAME _____

ADDRESS _____

CITY _____ STATE _____ ZIP _____

Continued from page 14

"Tackful" way to clean face shields

Irritating fine sawdust and dust accumulates on face shields and reduces visibility.
TIP: Inexpensive tack cloths wipe a shield clean in a hurry. Tack cloths will not create static and attract more dust—a frequent complaint about some wiping cloths. Keep a tack cloth around the shop just for this task.

—Donald Christianson, Green Bay, Wis.

Special sanding blocks

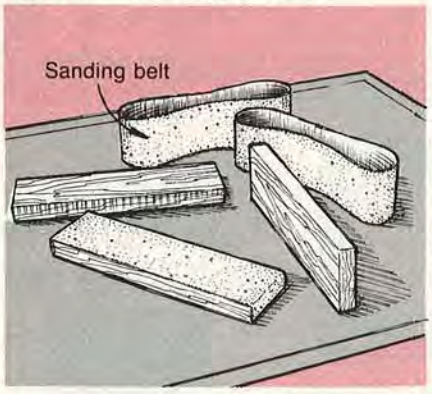

Homemade sanding blocks tend to wear out quickly and may not do a clean job in corners. There's got to be a better way.
TIP: Use the same sanding belts you use on your belt sander to do the job. Cut ¾" or 1" material equal to the width and one-half the total length of the belt. If necessary, insert a shim or wedge to tighten the belt. Use the same block to quickly change grits of sandpaper.

—Doug Lodin, Brooklyn Center, Minn.

Time's up!

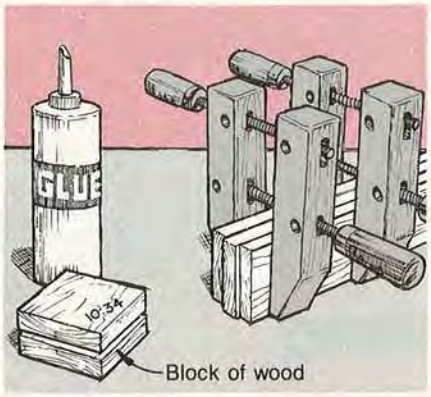

Most of us forget to note the time when projects are glued and clamped. Too often, the clamps are removed before the glue has set.
TIP: After you apply the clamps, glue two scraps of wood together and jot down the time. When the unclamped scraps are set, the clamped wood also will be set.

—From the WOOD *Shop*

Nonsmashing success

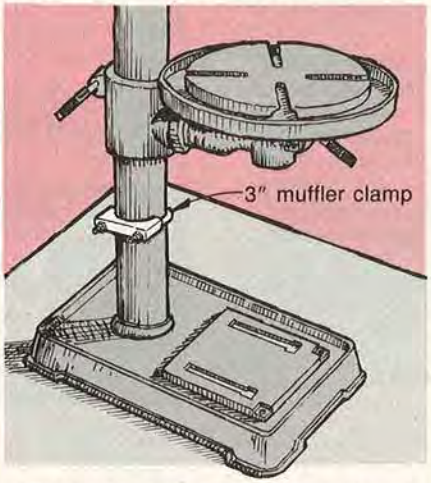

Ouch! No matter how many times your drill-press table has crashed to the floor, it will happen again. Will your knee or toes be in the path next time?
TIP: Prevent the next accident from happening. An inexpensive 3" muffler clamp fits around most drill-press columns. Clamp it as a safety support about 2" above the base so you can still handle large projects without worrying.

—John Sokolovich, New Oxford, Pa.

Hooked on safety

A safety-conscious woodworker always unplugs power tools, but power cords on the floor can be stepped on and damaged.
TIP: Form a hook from electrical wire, wrap the wire around the cord, and hang the cord from some convenient spot on the tool. (P.S., you'll find that the plug is easier to reach this way, too.)

—Thomas E. Chaffin, Jr., Mission Viejo, Calif.

The dry touch

Natural oils in your hands tend to rub off onto unfinished wood. The result is unsightly, telltale flaws that appear only after you apply stain or finish.
TIP: Rub your hands vigorously with sawdust from your table saw or belt sander before you handle the stock. The sawdust will draw out excess oil from your pores and make finishing neater.

—Larry Bedaw, North Swanzey, N.H.

• HITACHI • POWERMATIC • DELTA INTERNATIONAL •

Bratton Machinery presents first in a series

"LOOK WHAT I FOUND FOR YOU!"

BMS-601
18" bandsaw, 12" throat, 1 ph 2 hp, 220v, 1725 rpm, bld. 800 rpm, bld. max width—1¼", min. bld. width—¼". Comes complete with miter gauge and fence & rails. Wt. 400 lbs., ht. 76". Open stand. (Steve Bratton not included.)

$699.00

Delivered anywhere in continental USA

Steve Bratton, President of Bratton Machinery

NAT'L WATTS 800-874-8160

FLA WATTS 800-342-2641

BRATTON MACHINERY & SUPPLY
1015 Commercial St. • P.O. Box 20408FW • Tallahassee, FL 32316
Lowest Prices Anywhere! • Visa / MasterCard
904/222-4842

POWERMATIC • PORTER-CABLE • ELECTRA-BECKUM • DEWALT • MAKITA

HITACHI • DELTA INTERNATIONAL • BLACK & DECKER • PORTER-CABLE

• ELECTRA-BECKUM • DEWALT • MAKITA • HITACHI •

the American Woodworker

— WOODWORKERS —
Look at the partial list of projects and articles that were published in our last four issues. It is by no means a complete list, but serves as a sample to show you we are a magazine balanced between projects and articles. These are in addition to our six regular feature departments that are in every issue. Check below; you can subscribe for only $12.00.

ARTICLES

- The Basics of Steam Bending
- Your First Selling Show
- Woodturning: Developing The Design
- Tips for Successful Handcut Dovetails
- Improving The Quality Of Routed Edges
- Stationary Power Tools
- Setting Jointer Knives
- Carcase Construction
- The Wedged Through Tenon
- The Scraper
- Jointer Knife Setting Gauge
- Commonsense Tool Maintenance
- The Art Of Mother-of-Pearl Inlay
- Picture Frames
- Dust Collection System
- Sam Maloof's Finish
- The Finishing Room
- Router Fixture Design
- Shop Safety
- Woodworking Associations

PROJECTS

- Small Cherry Drop-Leaf Table
- Dovetail Clocks
- A Plantation Desk
- The Birth Of A Whale Cradle
- High Backed Settle
- Bench-Coffee Table
- Fireplace Bench
- Oak Wash Stand
- Small Tilt-Top Table
- Dry Sink Hutch
- Band Sawn Boxes
- Variable Jig For Cutting Tapers
- Hepplewhite End Tables
- Chippendale Lowboy
- Dutch Cupboard
- Traditional Chest
- Lap Desk
- Walnut Foot Stool
- Eli Terry Pillar And Scroll Clock
- Tenoning Jig

No matter what level of expertise or interest you have in woodworking, we have something that you will enjoy in every issue. Published quarterly, The American Woodworker is printed oversized (9" x 12") on heavier than usual paper. It is a "collector's type" publication you will want to keep for years to come. Subscribe today for only $12.00 per year or $22.00 for two years. (Foreign: $16.00 for one year, $26.00 for two years, U.S. funds only.) 100% guaranteed or money refunded on unmailed copies. Subscribe today!

The American Woodworker
P.O. Box 1408, Dept. W-8
Hendersonville, TN 37077-1408
(615) 822-0857

RIPSTRATE®

The Finger Saver
That Saves Work . . . .
And Improves the Job . . . .

Most safety devices require frequent adjustment. They usually wind up in a corner, not saving anything at all.

The RIPSTRATE guides the work against the fence. It requires no adjustment. No hands near the blade. No leaning over the saw table. No spoiled stock. NO KICKBACKS. No hassle. Just straight, clean cuts.

No wonder thousands of woodworkers, from amateur and professional craftsmen to large corporations, to government institutions, to colleges, to Air Force bases, now regard the RIPSTRATE as an essential part of their woodworking shops. After all, we are only born with ten fingers.

30 day money back trial. One year guarantee. $62.50 plus $3.50 shipping. Check, M.O., Visa or M/C. Free brochure.

Write or call our toll free number.
800 421 0256

FISHER HILL PRODUCTS
4 Fisher Hill
Fitzwilliam NH 03447

Dealer inquiries invited.

THE DOOR SHOP™

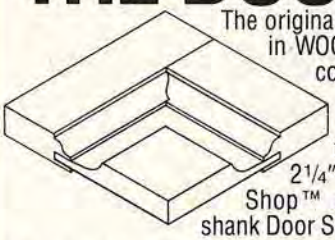

The original Ogee **DOOR SHOP**™ as featured in WOOD MAGAZINE (MAY/JUNE 85) is complete with stile & rail, slot & panel raising bits for the 1/4" chuck router. Bits are carbide tipped & BB & will make 3/4" thru 2 1/4" thick raised panel doors. Door Shop™ & Manual $89.50 ppd. The 1/2" shank Door Shop™ now available.

The 35 page **DOOR SHOP™ MANUAL** is clearly written and beautifully illustrated with over 156 detailed drawings covering the complete process of door building. Each section covers proper methods and exact set ups for the router, including how to recognize and correct for errors. There are sections covering Design, Lumber selection, Measuring, Panel Raising, curved & straight Rail and Stile cutting & fitting, Guides, Clamping, Gluing and Finishing. This is the most comprehensive manual out today. When purchasing the Door Shop™ manual for $5.00 you also receive Zac's 32 page Router bit and Shaper cutter catalog free. $5.00 rebated with purchase of our Door Shop™ or Panel Raiser™ bits.

Zac's carbide tipped **PANEL RAISER**™ router bits come in 3 styles; OGEE, COVE, & PROVINCIAL. All 1/2" shank bits are 3 1/2" in diam., with BB & give a full 1 1/2" raised panel. $99.50 @ ppd. All 1/4" shank bits are 2" in diam. & give a 1" or larger raised panel cut. $65 @ ppd.

TO ORDER CALL **800-441-0101**

IN NY **212-947-4496**

ZAC PRODUCTS INC. 533 West 34th Street NYC, NY 10001

Sometimes you want to build where there's no outlet handy.

When electrical outlets aren't available or convenient, you need Hitachi cordless power tools. You get all the precision and all the quality that Hitachi Power Tools are famous for. And you can use these tools *anywhere*. Hitachi cordless power tools come with automatic cut-off charger and battery pack.

Contact your local distributor.

HITACHI
Cordless Power Tools

WOOD ANECDOTE

Print this article

PERSIMMON

The hole-in-one ebony that puckered pioneers

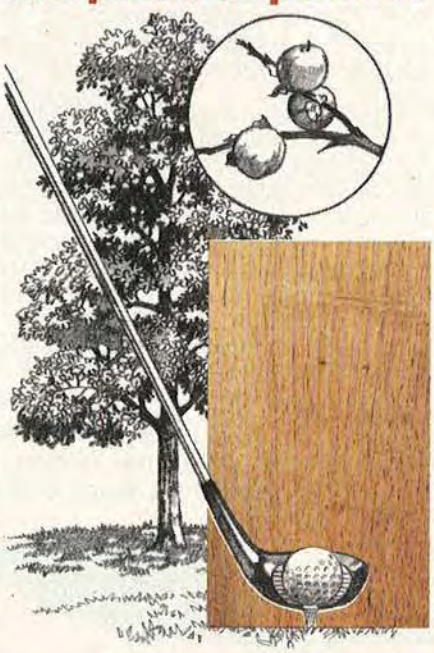

Pioneers learned to harvest the fruit of America's only ebony, persimmon, after fall's first frost. Before then, the small pinkish-red "possum apples" possess enough tannic acid to pucker impatient pickers until Christmas.

Of the more than 200 species of trees and shrubs that claim membership in the ebony family, persimmon *(Diospyros virginiana)* and Texas persimmon *(Diospyros texana)* are the only two you'll find in North America. The Texas species confines itself there, while the other is far-ranging. Often called possumwood because of this animal's attraction to the fruit, the common persimmon grows all the way from southern New York to Florida, west to Texas, and ventures into northern Missouri.

As in the pioneer past, folks still gather and use persimmons. The year's first frigid snap sends the tree's leaves tumbling, but sweetens the remaining small, globular fruit. Semi-sweet and edible right off the tree, persimmons become the fruity ingredient in jams, jellies, breads, and cookies.

Normally a small- to medium-sized tree no higher than 60–75′, the persimmon has wood much like its dark, tropical cousins. The small core of heartwood varies from black to dark brown with a nearly white sapwood that is close-grained and strong. The sapwood takes a high polish and is a favorite for treenware made locally where it grows, as well as long-lasting shuttles for looms in the textile industry.

It's on the golf course, however, that persimmon really shines. Here, pros and divoters alike praise premium drivers' heads made from persimmon sapwood, which neither splits nor splinters upon impact.

Photograph: Hopkins Associates
Illustration: Jim Stevenson

PRODUCTS THAT PERFORM

Print this article

Long-lasting flexible finisher

This tough, synthetic wood finishing pad won't shred like many finishing products, yet it's equivalent to 500-grit sandpaper and #00 steel wool. Use it to smooth bare wood, rub in oil finishes, and de-nib between coats—when you're through, you can rinse out the pad and tuck it away for your next project. Two other versions are available, too: a stripping pad for chemically removing paint or varnish and a metal-finishing pad. *3M Wood Finishing Pad, under $1.50 in hardware outlets, home centers, and discount stores across the country.*

This epoxy follows *your* directions

Adaptability is the key to this epoxy. By varying the proportion of resin to hardener, you create a custom mix ranging from 1:1 (for a joint that has to "give" a little bit) to 2:1 (for rigid strength). The adhesive is specially formulated for solid bonding to oily or acidic woods such as teak. *G2 Epoxy (750 ml. kit, including resin, hardener, gloves, and mixing supplies), $20.95. For the dealer nearest you, write Headland Intl., 2020 124th Ave. N.E., Suite C-102W, Bellevue, WA 98005.*

No checks, no splits, no errors

Worried about lumber checking or splitting during seasoning? Protect your investment in freshly cut log sections—or partially turned green wood projects you're planning to finish later—by coating them with this green wood sealer. You can apply the waxy sealer with a brush, swab, or low-pressure sprayer; one gallon covers about 100 square feet. *Chapman Sealtite 60 (catalog no. 01W61-LE). $13.25 per gallon postpaid. We obtained ours from Woodcraft Supply Corp., 1 Atlantic Ave., Box 4000, Woburn, MA 01888.*

Continued

®Minwax is a registered trademark ©1986 Minwax Company

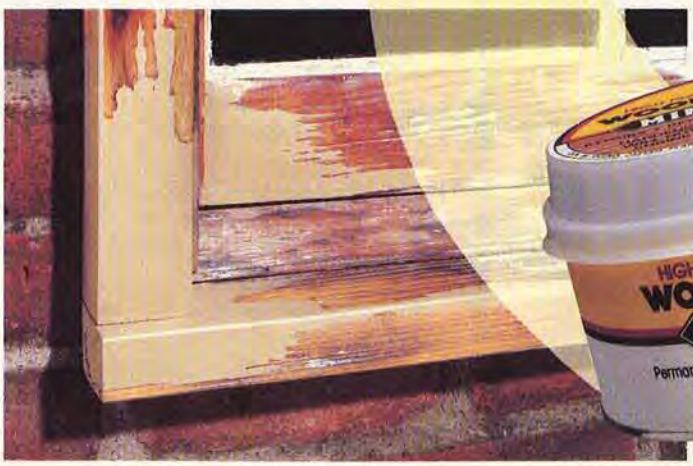

At last! A wood filler for the big jobs.

Now there's a wood filler that can rescue damaged and even rotted wood—High Performance Wood Filler by Minwax.

It won't shrink, crack, or fall out. It hardens in only 15 minutes and can be sanded, planed, drilled, carved, painted, or stained in less than half an hour. And it's weather, water, and rot resistant.

It repairs almost anything made of wood, indoors or out. From windowsills and decks to woodwork and furniture... it's the wood filler for the big jobs. Look for it at your favorite store. For more information, send in the coupon.

High Performance Wood Filler to the rescue!

Minwax Company, Inc., Dept. WO-076
P.O. Box 426, Little Falls, NJ 07424

Please send free information package.

Name

Address

City State Zip

MINWAX®

Minwax makes wood beautiful

We're Keeping The Flame Burning.

We believe Made in America still means made by the best. That's why you'll see the *Proudly Made in the USA* label on all our genuine, American-made CooperTools brands.

So the next time you need the right tool for the job, look for this label.

When you do, you'll be helping to keep this flame burning.

And keep America working.

BACK AMERICA
CooperTools

CRESCENT®LUFKIN®NICHOLSON®
PLUMB®TURNER®WELLER®WISS®XCELITE®

©1986 The Cooper Group, Inc.

Build Your Own Antique Telephone

Dakota Woodworks is the country's largest manufacturer of antique reproduction oak telephones. Now our authentic reproductions are available in kit form. The kits are available in two skill levels — so whether you're an accomplished woodworker or just beginning, we have a phone for you! Both levels include solid state electronic components and all outer hardware. "Pre-cut" phone kits include all cabinetry ready for stain and finish after only light sanding. Our "Components only" kits include hardware and electronics along with blueprints for the construction of the case. Send $2.00 for full-color catalog. (Sorry, but we cannot send free catalogs).

Dakota® Woodworks

Kindred, ND 58051 • (701) 428-3105

PRODUCTS THAT PERFORM

Continued

A compass you can count on

Milled from solid steel, this first-class 8″ pencil compass should last long enough to serve the next generation of woodworkers in your family. The heavy-duty fitted hinge and knurled locking nut ensure accurate adjustments that will stay locked. *Workshop-Quality Pencil Compass (catalog no. 04N02.01), $23.85 postpaid. We ordered ours from Garrett Wade Co., 161 Avenue of the Americas, Dept. W, New York, NY 10013.*

We call this a square deal

Here's a multifunctional tool that's as helpful for cabinetmaking as it is for your large-scale remodeling projects. Use the three-part instrument—straightedge/rule, adjustable T-head, and protractor square head—to level, duplicate angles, calculate rafters, and find centers of large circles (up to 9½′). The blade serves as a rule and straightedge; the T-head, with its plumb and level vial, acts as a rigid, lightweight level. *Panel Square (no. 475), $39.99 retail. Available in home centers and hardware stores nationally. Empire Level Manufacturing Corp., P.O. Box 26187, Dept. W, Milwaukee, WI 53226.*

Double your dadoing pleasure
Combining the convenience of an adjustable dado blade with the accuracy of a stackable dado set, this 8″ dado blade works well on both table and radial-arm saws. Two 24-tooth carbide-tipped blades make the tool infinitely adjustable from ¼″ to 13/16″ cutting widths. The twin-blade design helps cut square, flat-bottomed grooves. *Twin-Blade Carbide-Tipped Adjustable Dado (no. 32708), $100. Available from the 1985/86 Sears Power and Hand Tool Catalog. Or, purchase it at larger Sears stores.*

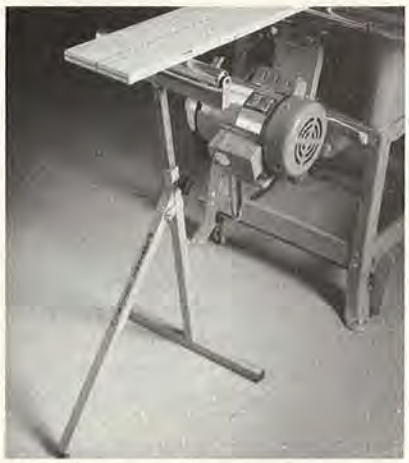

A leg up on big jobs
The next time you're ripping long boards on your table saw—or need a helper to hold up the "dummy end" of a project—unfold this solid pedestal roller. The welded-steel unit sits on non-marring floor pads, adjusts from 26–45″, and is topped by a 13″ steel ball-bearing roller. *HPR-13 Pedestal Roller, $39.95. For the dealer nearest you, write HTC Products, Inc., 120 E. Hudson—Dept. W, Royal Oak, MI 48067. Or, call toll-free: 800/624-2027.*

Be Your Own Boss and Make

$18.00 to $30.00 AN HOUR!

Your FREE Lifetime Security Fact Kit tells you how to make $18.00 to $30.00 an hour in your own Foley-Belsaw Full-Service Saw and Tool Sharpening Business. Your FREE Fact Kit explains how you can:

- **be your own BOSS!**
- **work full time or part time, right at home.**
- **do work you enjoy and take pride in.**
- **operate a CASH business where 90¢ of every dollar you take in is clear CASH profit.**

And it is *so easy* to learn. Foley-Belsaw gives you all the facts and instructions. No experience or special training is necessary. Foley-Belsaw tells you everything you need to know to be successful.

And there's plenty of business available in your area. You will be able to sharpen all types of saws, garden and shop tools for home, farm and industry.

You will be able to set your own hours and not have to worry about layoffs and strikes. And there are no franchise fees. Any age person can succeed.

But you've got to get the FACTS before you can get started. So write NOW for your FREE Lifetime Security Fact Kit. It's yours to keep with NO OBLIGATION.

. . . send NOW for your FREE Lifetime Security Fact Kit!

FOLEY BELSAW **FREE** LIFETIME SECURITY FACT KIT

The Foley-Belsaw Co.
20279 Field Bldg.
Kansas City, MO 64111

☐ **YES,** I want to know more! Please rush my FREE Lifetime Security Fact Kit.

Name _____

Address _____

City _____ State _____ Zip _____

( ) _____
Area Code Phone

FREE SANDING BELTS

DIRECT FROM THE MANUFACTURER

GET SIX FREE BELTS FOR EACH DOZEN ORDERED. All belts are aluminum oxide first quality. Our electronic presses make smooth bump-free splices.

Check your size and how many dozen. We will ship assorted grits unless otherwise specified.

☐ 1″ x 30″	— $12.70/doz.
☐ 1″ x 42″	— 12.75/doz.
☐ 1″ x 44″	— 12.80/doz.
☐ 3″ x 18″	— 13.75/doz.
☐ 3″ x 21″	— 14.25/doz.
☐ 3″ x 23¾″	— 14.70/doz.
☐ 3″ x 24″	— 14.75/doz.
☐ 3″ x 27″	— 15.25/doz.
☐ 4″ x 21¾″	— 16.75/doz.
☐ 4″ x 24″	— 17.25/doz.
☐ 4″ x 36″	— 20.95/doz.
☐ 6″ x 48″	— 26.95/½ doz. (3 FREE)

Other size belts on request.

9″ x 11″ Paper Sheets

A/O Cabinet Paper

	50/pk.	100/pk.
40-D	☐ $17/pk.	☐ $31/pk.
50-D	☐ 16/pk.	☐ 28/pk.
60-D	☐ 15/pk.	☐ 26/pk.
80-D	☐ 14/pk.	☐ 24/pk.
100-C	☐ 13/pk.	☐ 22/pk.
120-C	☐ 13/pk.	☐ 22/pk.
150-C	☐ 13/pk.	☐ 22/pk.

NEW ITEM!
☐ BELT CLEANING STICK - $6.95

No Load Finishing Paper

	50/pk.	100/pk.
180-A	☐ $11/pk.	☐ $19/pk.
220-A	☐ 11/pk.	☐ 19/pk.
280-A	☐ 11/pk.	☐ 19/pk.
320-A	☐ 11/pk.	☐ 19/pk.
400-A	☐ 11/pk.	☐ 19/pk.

Wet or Dry S/C Paper

	50/pk.	100/pk.
220-A	☐ $15/pk.	☐ $25/pk.
320-A	☐ 15/pk.	☐ 25/pk.
400-A	☐ 15/pk.	☐ 25/pk.
600-A	☐ 15/pk.	☐ 25/pk.

Prompt delivery from stock.
MONEY-BACK GUARANTEE

Shipping Charges - Under $35 add $2.50; $35 or more add $4.00—PA residents add 6% sales tax.

☐ Check or Money Order.
☐ MasterCard ☐ VISA Exp. Date _____
Acct. # _____
Name _____
Address _____
City, State & Zip _____

CALL TOLL FREE
1-800-428-2222
PA Only - 1-800-222-2292

INDUSTRIAL ABRASIVES CO.
643 North Eighth Street
Reading, PA 19603

ASK WOOD

Print this article

Whether your woodworker's license reads "Beginner," "Intermediate," or "Expert," you're bound to have a few questions about your favorite hobby. We can help. Each issue, we'll consult our experts for answers to your most-asked questions. Send your questions to:

Ask *WOOD*
Better Homes and Gardens®
***WOOD* Magazine**
Locust at 17th
Des Moines, Iowa 50336

Due to the volume of mail, we can't promise to answer all questions. But we try! Letters selected for use will be edited for publication.

SEEING RED UNDER AN OLD FINISH

Q. *While stripping an old dining table, I discovered what appears to be a red-dye finish. How can I remove the dye?*

—John P. Paintner, Sacramento, Calif.

A. This is a tough one to answer, because the dye may have thoroughly impregnated the wood. You'll have to do a little experimenting. First, try a different brand or type of stripper than the one you've already used. Or, sand a little deeper than you normally would, being careful not to sand through thin veneer or damage the edges. If you're still seeing red, you might try bleaching the color out of the wood.

The one remaining solution is to hide the red by using a brown or umber stain; a finish with no red in it will tend to neutralize the unwanted color.

TIPS ON SPRAYING POLYURETHANE

Q. *I am using lacquer to finish my projects but would like to try spraying polyurethane with my compressor. Can you advise me?*

—R. H. Johnson, Midwest City, Okla.

A. First, check the label for any directions regarding safety precautions, diluting, and spraying. For open spraying on large surfaces, use 30–35 psi with an open pattern releasing a moderate amount of polyurethane. For tight, inside spaces, reduce the pressure, and tighten the pattern with more polyurethane.

We suggest three coats. After applying a diluted sealer coat, sand with 220-grit sandpaper (or 0000-grade steel wool on irregular surfaces). Follow up with an undiluted second coat, and sand lightly with 320 grit. Finish with an undiluted top coat.

PLANELY REVOLUTIONARY
NEW CONCEPT IN ABRASIVE TECHNOLOGY
Porter-Cable's new Abrasive Plane lets you plane materials never before possible with standard planes. By replacing costly, fragile steel and carbide plane cutters with durable abrasive sanding sleeves. Work with concrete, ceramic tile, linoleum, plastics, fiberglass and non-ferrous metals, as well as wood. Economical sleeves available in 3 grade grits.
For more information, call your local Porter-Cable distributor.
Quality By Design
PORTER-CABLE
PROFESSIONAL POWER TOOLS
P.O. Box 2468, Jackson, Tennessee 38302, (901) 668-8600
TILE
METAL
MASONRY

BAND-SAW BURN MARKS

Q. *I would like to know what causes burn marks on the wood I cut on my band saw. Changing blades hasn't helped.*

—Walter Rybarczik, Perth Amboy, N.J.

A. You're probably trying to cut too tight a radius with too wide a blade. Use the chart, *below,* to determine the right blade for the radius you want to cut. In addition—if you're working with dense woods such as ebony, maple, or rosewood—your feed rate may be too slow, allowing the blade to overheat and burn the wood.

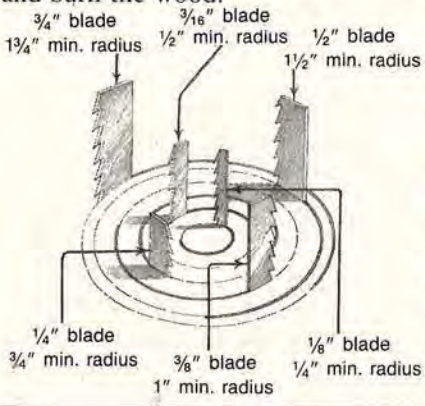

WHY JOINTS POP LOOSE

Q. *Can you tell me why glue joints pop loose on a project like a tabletop?*

—Howard Bushnell, Roadhouse, Ill.

A. We could write an entire article in response to this question, Howard. But here's a basic checklist to help you pinpoint the culprit.

1) Was the wood dry and stable to begin with? Remember that changes in humidity levels also can cause stress as joints swell and contract.

2) Did you join the boards properly? Mating edges should be perfectly matched.

3) Were both sides finished equally? You're asking for trouble later if you apply five coats to one side and none to the other.

4) Is gluing the problem? Your glue may have exceeded its shelf life, or it may simply have been a bad batch. Perhaps you exceeded the glue's open time—never let it start to set before you clamp the joint. Remember, too, that many glues should not be used below 60° F. Finally, did you thin the glue? You should never thin glue unless instructions are provided on the label.

SMOOTH SANDING IN TIGHT SPOTS

Q. *Help! After cutting fancy scroll designs with my band saw, how do I get rid of the rough blade marks in areas with as little as ½" clearance? I've tried a sandpaper-covered dowel in my electric drill, but there's not enough power and the dowel isn't stable enough.*

—Maria Kinsey, Bridgeport, Texas

A. You may be overdoing it by expecting a power tool to do the job. Finish-sanding of intricate shapes is best done by hand, and one solution may already be at your fingertips: an emery board. If an emery board won't fit (or is the wrong shape), use double-stick tape to hold sandpaper to tiny, odd-shaped wood scraps or old jigsaw blades (flatten the teeth with a hammer first).

Riffler rasps

A more expensive option—but one that might be just the ticket if you do a lot of fine-detail work—is a set of *riffler rasps* (shown above). They're designed for wood carving and sculpting and are available in many grades and shapes from mail-order woodworking suppliers. One supplier offering several riffler sets is Woodcraft (41 Atlantic Ave., P.O. Box 4000, Woburn, MA 01888).

Continued

WOODWORKS

		Qty.	Total
3-1/2" Maple Shaker Pegs	$20.00/100	___	___
1-3/4" Mini Shaker Pegs	7.00/100	___	___
3-3/8" Kitchen Mug Pegs	20.00/100	___	___
2-7/16" Tie Rack Pegs (NEW)	7.00/100	___	___
Bean Pot Candle Cup	17.00/100	___	___
Brass Pltd Candle Cup Insert	3.00/25	___	___

LOW PRICES

Maple Toy Wheels with 1/4 holes			
1 x 3/8 Maple Toy Wheels	$6.50/100	___	___
1-1/4 x 7/16	8.50/100	___	___
1-1/2 x 1/2	10.00/100	___	___
1-3/4 x 9/16	14.00/100	___	___
2 x 5/8	17.50/100	___	___
Axle Pegs For Above	4.50/100	___	___
Pickle Barrel-Toy Cargo	1.90/6	___	___
Little Man	1.60/7	___	___
Smokestacks 2-3/4" Tall	4.80/12	___	___

HIGH QUALITY

3/4" Full Round Balls	$8.00/100	___	___
1" Full Round Balls	10.00/100	___	___
Grade A Large Hen Eggs	35.00/100	___	___
Nutcracker - White Birch	3.00/Each	___	___

FAST SERVICE

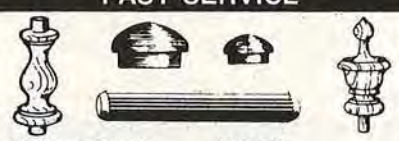

3/8" Maple Buttons	$2.15/100	___	___
1/2" Maple Buttons	2.25/100	___	___
3/8" x 2" Dowel Pins	2.20/100	___	___
1-1/2" Maple Spindles	9.00/100	___	___
1-1/2" Oak Spindles	12.00/100	___	___
Clockmaker's Finial	1.50/Each	___	___

LARGE SELECTION

1/4" x 36" Birch Dowels	$4.25/25	___	___
3/8" x 36" Birch Dowels	6.50/25	___	___
1/2" x 36" Birch Dowels	10.50/25	___	___
3/8" x 36" Oak Dowels	5.50/10	___	___
1/2" x 36" Oak Dowels	8.00/10	___	___
3/4" x 36" Oak Dowels	15.00/10	___	___

MONEY BACK GUARANTEE

BONUS

CHECK THIS BOX, AND AS A BONUS WITH ANY ORDER FOR WOOD PARTS, WE WILL SEND YOU A COMPLIMENTARY 8 OZ. BOTTLE OF FRANKLIN TITEBOND WOOD GLUE.
☐ CHECK HERE

$2.25 VALUE #B7

WOOD PARTS WOODWORKS

32 PAGE 1986 CATALOG
OVER 100 NEW ITEMS
$1.00 (FREE WITH ORDER)

ORDER NOW

TOTAL FOR GOODS	
TEXANS ONLY ADD 5% SALES TAX	
HANDLING AND INSURANCE	$3.00
FINAL TOTAL	

MC OR VISA ☐ CHECK ENCLOSED ☐

ACCOUNT #_____

EXPIRES_____ PHONE_____

NAME_____

SHIP TO_____

CITY/STATE/ZIP_____

817/281-4447

WOODWORKS

4013-A CLAY AVE. • FT. WORTH, TX 76117

Luxurious Contemporary Custom Homes that retail for $17.00 Per Sq. Ft.

Eagle's Nest Homes

Modern technology, excellent craftsmanship, and American ingenuity has resulted in a housing design with standard features not found in homes selling at twice the price.

- Fully Insulated
- Thermo Pane Windows
- Cathedral Ceilings
- Exterior Decks
- Quality Construction
- FHA and VA Accepted
- Built-in Computer Center which allows the home to perform many functions for the occupants.
- Interior Design Flexibility

EAGLE'S NEST HOMES is seeking one district representative to establish retail sales.

Unlimited Income Potential
Protected Territory
Factory Training
No Real Estate License Required
Investment Secured by Model Home

Individual selected must have the ability to purchase or mortgage a $21,000 model home. Home may be lived in or used as an office.

Call Mr. Wood
collect (404) 255-0728
6363 Roswell Rd., Suite B
Atlanta, GA 30328

#682 Storage Shed

Clear, concise plans to build from.
- 8-0" x 10-0"
- Two 24" doors offer a wide 4'-0" opening
- Recessed area for firewood
- Work counter with tool board

Order this plan and gain back that cluttered space in your garage! $14.95 plus $1.50 P & H Iowa res. add 4% sales tax

Order our new catalog for only $2.00 (refundable with your next order)

All American Workshop Blueprint Co.

P.O. Box 65725
W. Des Moines, IA 50265

HUGGER HOOKS REALLY LOCK!

Now you can remove a tool or utensil from perforated board without having the hook fall out! Just turn the exposed screwhead and hugger hooks will stay put. Reverse the turn, and you can remove the hook for resetting! Available in three sizes: for 1/8", 3/16", 1/4" thick board in various shapes and styles. Mail order assortment of 20 hooks is $4.00. Specify 1/8", 3/16", 1/4" board thickness.

ROMAN PRODUCTS, INC.
4363 Loveland St., Golden, CO 80403

Cascade Precision Tool Co.
Box 848, Mercer Island, WA 98040

OFFERING PREMIUM QUALITY S BRAND CARBIDE TIPPED ROUTER BITS AND SHAPER CUTTERS

FREE 1/2" DOVETAIL WHEN YOU ORDER THIS SET OF CARBIDE-TIPPED ROUTER BITS INCLUDING 3/8" RABBET, 5/32" OGEE, 1/2" COVE, 1/2" ROUNDOVER, 1/2" AND 1/4" STRAIGHT BITS WITH EXTRA BEARING FOR BEADING

1/4" SHANK SET **$64.95** PPD. 1/2" SHANK SET **$69.95** PPD.

CARBIDE TIPPED 3 PIECE ROUTER BIT SET WITH 1/2" SHANK AND 3 1/2" O.D. PANEL RAISER. AVAILABLE IN 5 PROFILES BELOW. RAIL/STILE CUTTERS AVAILABLE IN ROUNDOVER, OGEE AND TRADITIONAL PROFILES. **$179.95 per set**

ROUTER BIT PANEL RAISER ALONE **$59.95**

S BRAND

3 WING PANEL RAISERS IN 5 PROFILES 3 mm (1/8") CARBIDE **$69.95 ea.**

4 5/8" O.D. WITH 3/4" BORE & 1/2" BUSHING OR 5 1/2" O.D. WITH 1 1/4" BORE & 1" BUSHING

5° FACE CUT | 15° FACE CUT | CONCAVE | 12° FACE & QTR RD | CONVEX

SHAPER CUTTERS
3/4" BORE WITH 1/2" BUSHING from $29.95
1/2" BORE IN 20 PROFILES - $22.00

6-PIECE CABINET SETS
3/4" BORE WITH 1/2" BUSHING $179.95

S BRAND **"MAGNUM LINE"**
SHAPER CUTTERS - CABINET/DOOR SETS
4 Wing • 1 1/4" Bore (1" Bushing) • 4"-4 1/2" Diameter • 3 mm (1/8") thick carbide
AVAILABLE AT AFFORDABLE PRICES

ORDER BY PHONE WITH VISA/MC OR SEND MO, CHECK, VISA/MC NUMBER, EXP. DATE, PHONE NUMBER. CATALOG $1 — FEATURING OVER 200 CARBIDE TIPPED ROUTER BITS AND SHAPER CUTTERS.

DEALER INQUIRIES INVITED

SATISFACTION GUARANTEED
ORDER TOLL FREE
1-(800) 235-0272
IN WASHINGTON CALL 1-206-236-0272
CHARGE YOUR ORDER
10 AM-7 PM
Monday through Saturday

MasterCard VISA

—Rare—
MACASSAR EBONY

MAGNIFICENT GRAIN, high figure or subtle.

MATCHLESS DIMENSIONS, 1" up to 9" thick, 4" up to 20" wide. Random lengths to 9 feet. Best selection available in the U.S.

LOWEST COST from a *DIRECT IMPORTER. NO MINIMUM ORDER.*

A. Eisenbrand, Inc.
4100 Spencer Street, Suite EW3
Torrance, CA 90503
(213) 542-3576

WOODWORKERS
FULL SIZE PATTERNS

Simple to make – Fun – Profitable

- 75 pattern packet plus "Shop Secrets"
- Over 50 "Folk Art" patterns
- 6 "Wind-Action" whirligigs packet
- 40 craft plaques plus projects
- 8 child pleasing aircraft packet
- 6 decorative magazine racks

Send $6.00 per blueprint packet or choose any 3 FOR ONLY $12.00.

ACCENTS, Dept. MA76
P.O. Box 262
Danvers, MA 01923

Brochure of 400 designs $2.00
(Free with order)

ASK WOOD

Continued

SANDING YOURSELF INTO A CORNER

Q. *What's the best way to sand tight inside corners on cabinets or shelves, without scuffing the adjoining panels?*

—Wesley Lampson, Buffalo, N.Y.

A. Dig into your scrap bin for the material to make the sanding tool shown here. Because its edges are tapered, you'll be able to avoid scuffing panels that don't need sanding. You can make the tool easy to control by nailing a small wood-block handle to the top and holding the sandpaper in place with masking tape.

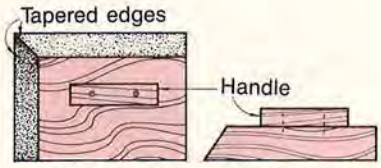

WHY CARBIDE BITS COST MORE

Q. *Why do carbide-tipped router bits cost substantially more than bits made of high-speed steel?*

—J. Wester, Jacksonville, Fla.

A. To get the longer life of carbide-tipped bits, you're paying for two things: more expensive raw materials and increased labor during the manufacturing process. Carbide is much more highly refined than high-speed steel, and the carbide must be bonded to the cutting edges of the bits, which adds to production time.

Here's a tip: When you go shopping for router bits, steer away from those that are only "gilded" with carbide. Instead, choose router bits that have a substantial carbide surface that you can resharpen several times. You'll save money in the long run.

LIMITED EDITION **STATUE of LIBERTY**

Commemorative Knife Layered In Pure 24 K GOLD for only $5?

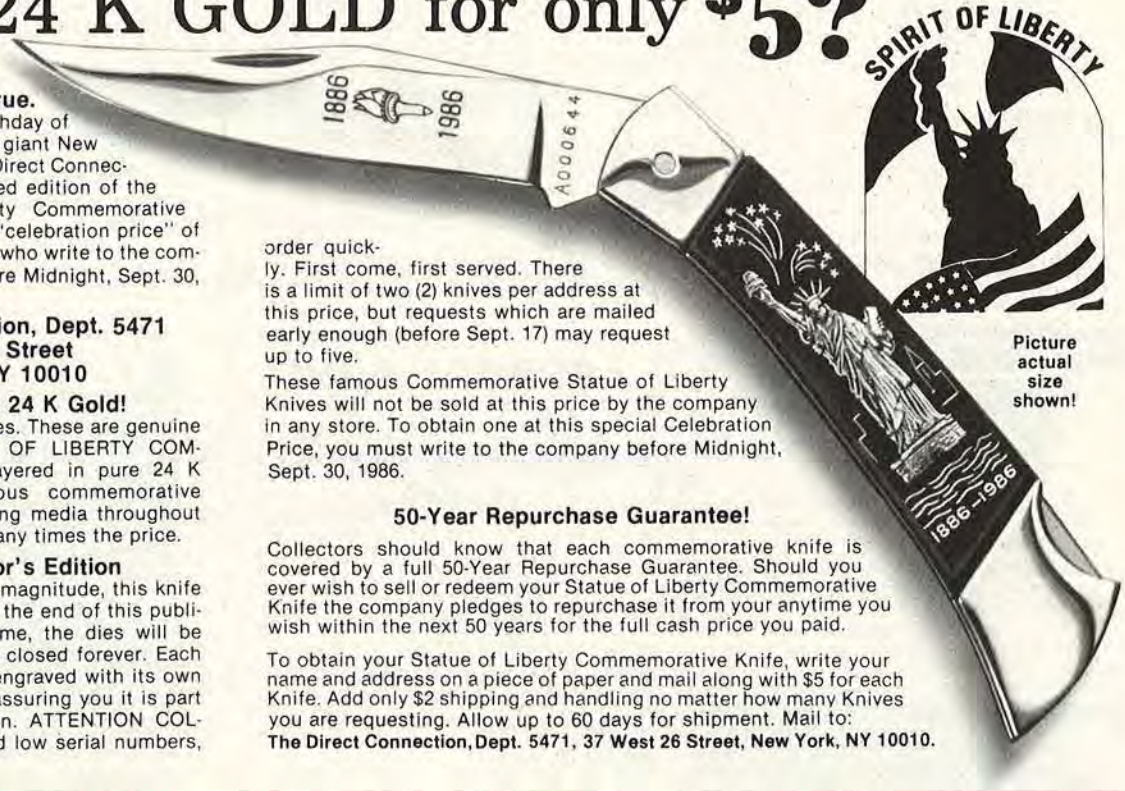

Picture actual size shown!

Unbelievable, but true.
To celebrate the 100th birthday of our most famous lady, the giant New York publicity firm of The Direct Connection will distribute a limited edition of the famous Statue of Liberty Commemorative Knife for the astonishing "celebration price" of only $5 each only to those who write to the company address (below) before Midnight, Sept. 30, 1986.

The Direct Connection, Dept. 5471
37 West 26 Street
New York, NY 10010

Layered in pure 24 K Gold!
These knives are not copies. These are genuine Limited Edition STATUE OF LIBERTY COMMEMORATIVE KNIVES layered in pure 24 K GOLD!—the same famous commemorative knives advertised in leading media throughout America and selling for many times the price.

A True Collector's Edition
As befits a tribute of this magnitude, this knife will be available only until the end of this publicity campaign...at that time, the dies will be destroyed and the edition closed forever. Each knife you receive will be engraved with its own individual serial number, assuring you it is part of this special celebration. ATTENTION COLLECTORS! for the coveted low serial numbers, order quickly. First come, first served. There is a limit of two (2) knives per address at this price, but requests which are mailed early enough (before Sept. 17) may request up to five.

These famous Commemorative Statue of Liberty Knives will not be sold at this price by the company in any store. To obtain one at this special Celebration Price, you must write to the company before Midnight, Sept. 30, 1986.

50-Year Repurchase Guarantee!

Collectors should know that each commemorative knife is covered by a full 50-Year Repurchase Guarantee. Should you ever wish to sell or redeem your Statue of Liberty Commemorative Knife the company pledges to repurchase it from your anytime you wish within the next 50 years for the full cash price you paid.

To obtain your Statue of Liberty Commemorative Knife, write your name and address on a piece of paper and mail along with $5 for each Knife. Add only $2 shipping and handling no matter how many Knives you are requesting. Allow up to 60 days for shipment. Mail to:
The Direct Connection, Dept. 5471, 37 West 26 Street, New York, NY 10010.

SOUND ADVICE

Print this article

HOW TO HEAD OFF WORKSHOP MISTAKES

It's a shame when your sense of satisfaction with a completed project gets spoiled by obvious flaws in workmanship—flaws that you could have avoided. Here are eight planning tips that will help you avoid trip-ups.

1 Draw it out. Your plans don't have to be good enough to satisfy an engineer—rough drawings will do—but you definitely need them in some form. Chances are, if you can't figure it out on paper, you won't fare any better in the shop.

2 Buy more than you need, not less. Don't procrastinate and think you can always return later for that extra board or can of stain. The next shipment of walnut may be a shade lighter, and that particular stain may be gone. Trying to match later always causes problems.

3 Measure twice and cut once. It's an adage that merits repeating—often. The few seconds it takes to check a measurement can be well spent when you consider the time it takes to find a board long enough to replace the one you cut just a hair too short.

4 Make 'em fit tight. Loose joints mean wobbly furniture. Test-cut joints and dadoes on scrap first. It's much easier to readjust a shelf dado for a shallower cut than to rebuild half a bookcase due to a cut made too wide or deep.

5 Dry-clamp first. When you have someone yelling in the background to "Get it done and in the living room," time can seem more important than quality. But gluing and clamping a frame together only to find that one misfit piece throws the whole cabinet out of square is much worse.

6 Sand till you're dead tired, and then sand some more. The best-built project is no better than the finish. A hastily sanded surface always tells on you. Left-behind scratches never fail to reappear when you apply finish.

7 Know your finish and take your time. You're almost there—sturdy joints and perfectly sanded surfaces. Now comes the finale. Start with a dust-free shop, and use quality brushes and finishes. Good finishes require soft brushes, well stirred (not shaken) varnishes, and light sanding or steel-wooling between coats.

8 Slooowww dowwwnnn. Last, but definitely not the least important of our tips is to *take your time.* Remember that what takes 20 hours to build may be around your house for 20 years. The pleasure you derive from viewing the project *after* it leaves your shop depends on the time you spent working on it *in* your shop.

During long hours of shaping and sanding, I wondered how my mahogany looked when the wood was still reaching toward the tropical sun . . .

START FROM THE BEGINNING.

After searching far and wide, I am thrilled to share with you four varieties of uncommon and amazing exotic seedlings. Grow these 2-4 inch tall beauties as house plants. *Fascinating gift.*

- ☐ Mahogany $5.95
- ☐ Teak $7.95
- ☐ Lignum Vitae $7.95
- ☐ Camphorwood $5.95

Limited supply. Complete growing instructions included. Add $2.00 postage and handling for one or $3.75 for two or more.

Send your check or money order to:

LIVING EXOTIC HARDWOODS
P.O. Box 4172 • Boulder, CO 80306

PRECISION MOVEMENTS
(215) 967-3156

QUARTZ MOVEMENT **"Six-Pack"** ONLY **$21.00**

SAVE OVER 30%

- Solid Brass Shaft
- On-Off Switch
- Accurate to Within 15 sec./month
- 5 YEAR GUARANTEE
- 4 Sizes Available
  3/8" 9/16" 3/4" 7/8"
  Sizes May Not Be Assorted

EACH QUARTZ "Six-Pack" INCLUDES:
6 QC Quartz Movements
6 Pairs of 2¼" Contemporary Brass Hands
6 Pairs of 3" Traditional Brass Hands
6 Brass Second Hands
6 Sets of Hangers and Hardware

PA. Residents Please Add 6% Sales Tax
+ $2.50 Shipping and Handling Each.

P.O. Box 689 DEPT. G • EMMAUS, PA 18049

The Woodworkers' Store
Rogers, MN 55374
Dept. J407

Free Catalog

44 colorful pages of speciality woodworking supplies.

PROTECT YOUR EYES

- Large 62mm polycarbonate lenses now have exclusive "4-C" scratch, chemical, static, and fog resistant finish.
- Ratchet hinge front, angles in or out to assure comfortable, goggle-like fit. One size fits all. Ventilated side protection.

Write or call us for a free Head-to-Toe Safety Catalog

Money back guarantee. You must be pleased.
Check, Money Order, MasterCard, Visa.
$9.95 Delivered

KENCO SAFETY PRODUCTS DIV.
78 Glasco Turnpike P.O. Box 385 Woodstock, N.Y. 12498
IN NY STATE (914) 679-5246
OUT OF STATE 1-800-341-4103

SCROLL SAW OWNERS -
Lettering Layout Guides!

- Use our specially designed guides to layout letters & numbers to be cut from wood or other materials.
- Made from a durable plastic material.
- Several styles & sizes.

Send $3.00 (Refundable with first order) for descriptive brochure & prices to:

SEYCO SALES
1238 Bardfield
Box 472749
Garland, Texas 75047

WOOD REPAIR

Durham's Rock Hard Water Putty makes lasting repairs in wood. Won't shrink or fall out. Sets quickly, holds tight and can easily be painted. Economical, easy to use. Available at lumber, paint and hardware stores.

DURHAM'S ROCK HARD WATER PUTTY
STICKS, STAYS PUT
WILL NOT SHRINK

DONALD DURHAM COMPANY
Box 804-W Des Moines, IA 50304

BRANDING IRON

For hard and soft wood

$27.00
Plus $2.00 for shipping and handling
Nebr. residents add correct sales tax

GUARANTEED

- **Shipped in 1 week**
- Solid brass head — deep cut letters
- First Line: HAND CRAFTED BY — as above
- 2nd line: Your choice — 20 characters/spaces max.
- Compact size
- As above but with 3rd line — $37.00 + $2.00
- Other models and free brochure available

Order anytime by phone or mail

NOVA TOOL CO.
4533 Colfax Circle, Dept. BH86
P.O. Box 29341, Lincoln, NE 68529
(402) 464-0511

VISA MasterCard

RECANE *for fun and profit*

Recane or re-rush heirloom chairs — for yourself or for others as a profitable hobby — with our full line of materials & instruction books.

Since 1934 America's largest selection of caning & basketry materials & supplies —

- **Superior quality weaving cane & machine woven cane**
- **Flat oval & round reeds**
- **Fibre & genuine rush**
- **Danish seat cord**
- **Raffia, rattan, seagrass**
- **Hoops & handles**

Illustrated catalog with complete how-to-do-it information, prices, order form: $1 (refundable with 1st order)

CANE & BASKET SUPPLY CO.
1283 S. Cochran, Dept. W, Los Angeles, CA 90019

DOWELS - PLUGS - PEGS

Manufacturer Direct
Largest & finest selection Oak, Walnut, Hickory, Maple, Cherry, Mahogany, Teak, even Treated Dowels.
Quantity discounts.

MIDWEST DOWEL WORKS, INC.
4631 Hutchinson Road
Cincinnati, Ohio 45248
(513) 574-8488

DOWELS
¼" - 2" Diameter

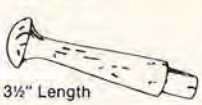

3½" Length

SHAKER PEGS
Hard Maple
Poplar
Oak, Red or White
Walnut
Also Mini-Pegs

DUTCH WALL PEG
Hard Maple
Oak
Walnut

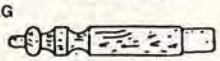

4" Length

Catalogue on Request

BAND SAW OWNERS!

A NEW TOOL is now available so you can make or repair any length Band Saw Blade in minutes!

This patented tool was developed for use in our own shop and has proven itself with thousands of high quality, true running splices.

Our splicer enables any craftsman to make up any length blade from economical coil blade stock QUICKLY and EASILY. The resulting silver brazed joint normally outlasts the service life of the blade.

Three models are currently available:
1C-001 ¼" to ¾" Blades..... $ 49.95 ppd
1C-002 ⅛" to ⅜" Blades..... 49.95 ppd
1C-003 ⅜" to 1½" Blades..... 150.00 ppd

The tool comes complete with detailed instructions and supplies for approximately 100 splices.

We also carry additional supplies and OLSON band saw stock at reasonable prices.

Send L.S.A.S.E. for FREE information to:
NEW MILFORD SPECIALTIES CO.
Dept. BH, 24A South Main Street
New Milford, CT 06776
(203) 426-4276

WOOD TOY

★ Patterns
★ Parts
★ Wheels
★ Many New Patterns to Choose from.
★ Executive toys

SEND $1.00 FOR NEW CATALOG & RECEIVE COUPON FOR **FREE** WHEELS & AXLE PEGS.

toys and joys

Box 628W Lynden, Wash. 98264

LOOKING FOR PIERCED TIN?
Come to the source!

Handcrafted metal panels for pie safes, cupboards, kitchen cabinets & other projects.

Ready to install in a variety of sizes, 16 different finishes, over 150 patterns — OR all materials, tools, patterns & instructions to do-it-yourself!

Our specialty is custom work to your specifications.

TIN-ZINC-COPPER-BRASS & MORE!

Swatches & metal samples $7.95 ppd.
Catalog $3.00 or free with order.
NJ res. add tax.

Make this bird — & More! Kit $19.95 ppd.
Kits! COUNTRY ACCENTS™ Lanterns!
RD #2 Box 293 Dept. WM Stockton, NJ 08559
(201) 996-2885
Over 25 years experience in pierced tin

Print this article

BEECH

beautiful, bountiful, bendable . . . and barely known

There's a plentiful, cabinet-quality hardwood—pretty as yellow birch, strong as hard maple, and pliable as ash. But hardly anyone uses it! American beech grows over nearly half the nation, yet it seems you only hear about it from the brewery that touts "beechwood-aged" beer. (Beech, as it turns out, imparts no taste of its own to the brew.)

Long ago, however, English craftsmen turned a European variety of beech to make legs for Windsor chairs. Even the ancient Greeks and Romans worked beech into tables, chairs, and chests.

In this country, beech lags behind other woods in popularity because it takes careful handling during seasoning to avoid checking, warping, shrinking, and discoloration. To avoid the processing expense, beech logs are sold for paper pulp or made into clothespins.

Some beech is used in the furniture industry for framing and bentwood parts. In the cabinet shop, it's made into moldings.

Beech heartwood

Beech sapwood

Wood Identification

You'll find beech in every hemisphere, yet only one species grows in the U.S., *Fagus grandifolia.* Loosely translated, *fagus* means "to eat," referring to its edible nuts, while *grandifolia* means "large-leaved."

Beech trees often grow in pure stands in lower elevations from Maine south to northern Florida and west to Wisconsin and Texas. In prime conditions, trees may tower to 120′ and approach 4′ in diameter. A slow grower, beech is a surviver, living up to 300 and 400 years.

You can spot beech by its smooth, skinlike, silver-gray bark, here and there disfigured by dark blotches and scars.

Beech wood resembles yellow birch, but with a tint of red in the darker brown heartwood and a hint of pink in the lighter sapwood. The grain is fine, with telltale, tiny pores. Count on beech to be hard, strong, and heavy—it weighs about 45 lbs. per cubic foot dry.

Working properties

Think of beech as working like hard maple and bending like ash. It doesn't yield easily to hand tools, but it machines well.

Screws and nails hold tight in beech's close grain. Gluing presents no problems, either. The wood readily takes stain and sands to a smooth finish.

Beech does have a peculiarity, however. Because of the heartwood and sapwood's markedly different expansion and contraction rates, you wouldn't mix the two in the same project. If you did, you could end up with separated joints or uneven surfaces in the finished piece.

Uses in woodworking

Beech represents one of a handful of woods that could be classified as "all-purpose" for interior use. It fills the bill for frame construction as well as finished surfaces, and it bends when steamed.

Made into drawers, beech exhibits the unique property of becoming slicker as it rubs against other wood members.

In woodturning, beech excels in objects with delicate stems, such as goblets. For toys, it resists splintering and chipping, and has no toxic properties (keep that quality in mind for bowls and cutting boards, too). Beech also resists wear when wet.

Cost and availability

Although beech may be abundant in the forest, you won't find it everywhere at retail, especially far from its source. The large suppliers that carry beech charge less for it than the more popular hard maple or yellow birch.

Beech boards may be as wide as 12″ and range up to 16′ long. While beech sometimes becomes veneer, due to lack of demand you'll seldom find it used as the face on hardwood plywood.

Illustration: Steve Schindler

Lending a Helping Hand

Above. To introduce a new project design, Don builds a prototype and draws up plans. Here, at the group table, students discuss the construction of the train they'll build.

Right. Making unfinished oak and walnut toys comes quickly to Homebound Training students. After training, the disabled produce them at home.

Don Mostrom, sculptor-turned-woodworker, helps the disabled build skills and confidence

Print this article

Don Mostrom isn't the type of person to take a bow. He would never tell you that he made more than a small contribution to helping someone feel good about himself again. But as a woodworking instructor in a program for the disabled, Don contributes skill, patience, and a quiet understanding to those who need to reaffirm their sense of self-worth.

For six years, Don has taught woodworking in the Homebound Training Program sponsored by the Easter Seal Society of Iowa and the Iowa Department of Social Services. The program's goal: To teach unemployable, physically disabled Iowans the skills to make crafts for resale. The benefits of the program extend far beyond that, however, for the instructor as well as his students.

A WORKSHOP OF PROMISE

"In today's world, where it seems there's such a 'do this for me' attitude, Homebound Training is a nice little oasis," Don explains. "Those people do something for someone else. And, the students do a lot for me—inside."

In the Easter Seal workshop, Don instructs his classes of six to eight students in the use of the table saw, band saw, drill press, lathe, and router. They make toys, doll furniture, birdhouses and feeders, whirligigs, jewelry boxes, and other projects. After this first round of training, Don's students return home and set up shop with a full complement of the tools they've learned to use—paid for by the Iowa Easter Seal Society and the state, if students can't afford them.

"The projects aren't complex," Don says from his desk in the corner of the workshop, "but they sell. I teach two four-week sessions. The first gives a good foundation in how to make things that have sales appeal but don't take a lot of time."

During a year's hiatus, students produce items at home and sell them through the Easter Seal Society's craftshop in the headquarters at Camp Sunnyside, near Des Moines. With the aid of the Iowa Elks Association, the craftshop markets students' wares without charge. The aspiring woodworkers can also sell on their own if they choose.

During the second training session, Don expands returning students' knowledge and skills with projects that focus specifically on router and lathe work, as well as finishing methods. At graduation, they add these new tools to their home workshop.

According to Don, students place great importance on making projects that actually sell, but they receive something more important than money—quality of life.

Continued

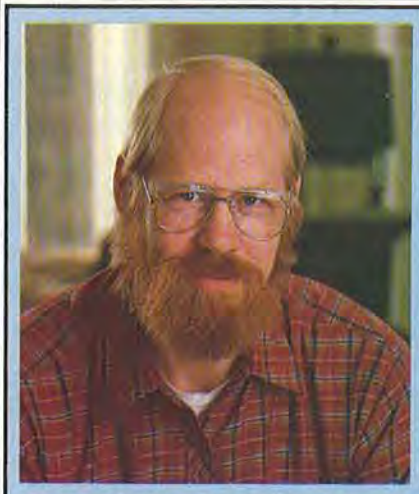

As a youngster in northern Minnesota, Don Mostrom, now 40, had the best playground in the world—hundreds of acres of timber. From that stockpile, he made lots of toys, and unknowingly prepared for a career in wood.

After Vietnam, where Don served as a U.S. Army medic, he studied fine arts at Drake University. While earning his MFA degree in sculpture, Don developed a keen interest in woodworking. Now he designs and builds custom furniture, restores antiques, and fine-tunes the Des Moines home he shares with his wife, Etta, and daughter, Berkleigh. For two months each year, Don shares his skills with the disabled in a unique rehabilitation program.

Lending a Helping Hand

NO DISABILITIES THAT CAN'T BE OVERCOME

Don realizes he has an advantage that many teachers don't: His students are highly motivated. "They come early for class and want to stay after it's over. I even have to throw them out at lunchtime!" Don says.

This teacher doesn't dwell on individual disabilities. There's a prevailing "can do" spirit in this workshop. Don looks at his job this way: "I deal with people, *first* and *foremost*. I take my students, whoever they are, however they are, as they are."

But Don sometimes has to deal with mental attitudes as well as physical disabilities.

A farmer in his early fifties had his active life restricted by paralysis and a wheelchair. In the workshop, Don saw dejection and hopelessness, and sensed the man's resentment.

"He wouldn't accept what had happened, and he felt useless. Slowly, he discovered that he really could do something," Don recalls. "Then, he accepted his condition and decided to do something. From then on, there was no stopping him. He made our toys, designed his own, went home to set up shop, and I never saw him in a class again. He's still up in northern Iowa somewhere selling toys.

Carpenter Larry Sytsma (shown in photo, *below*) suffered a stroke that left his right arm almost useless. Despite this, Larry was determined to learn all the woodworking skills he could—as fast and well as anyone else in the class.

Some techniques posed particular problems, such as boring on the drill press. So Don taught him how to clamp workpieces down for one-handed machining.

"Don had more patience than I did," Larry says. "I eventually got rid of lots of the clamps and was able to use my arm more, even as a dead weight. But I wouldn't have started doing that if Don hadn't gotten me going."

Don sees that his students receive what they need to get their job done—special jigs, fixtures, or simply personal attention. Yet, he's never overbearing.

"The more they do on their own, the better off they'll be when they leave here," Don states. "They need the freedom to make mistakes. If they do, we can find out what went wrong and correct it."

Homebound Training offers disabled Iowans far more than "occupational therapy," says Fred J. Kelly, the program's director. "That label fails to capture the wonderful feeling of self-worth students experience," he says. If you'd like details on Homebound Training, write: The Iowa Easter Seal Society, Camp Sunnyside, P.O. Box 4002, Des Moines, IA 50333.

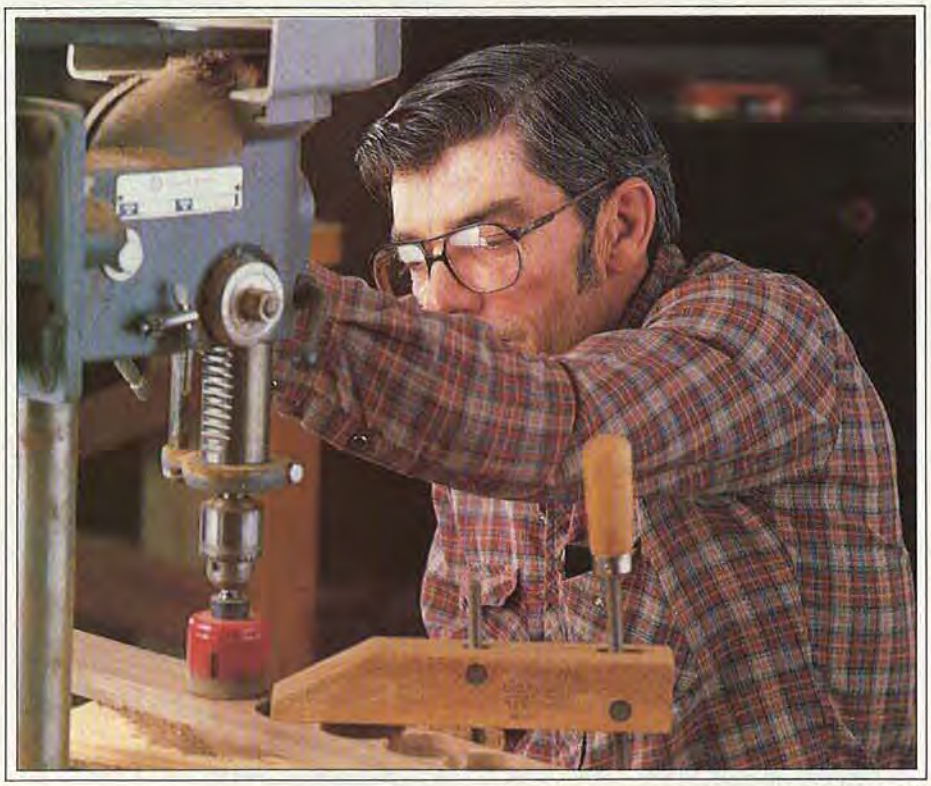

Above. **Boring toy wheels on the drill press was a challenge for Larry Sytsma of Tracy, Iowa. A stroke forced him to adapt one-handed operation.**

Right. **Second-session student Bob Lechtenburg of Lawler, Iowa, has a disabling back injury. With Don's help, he learns clock-case construction.**

DON MOSTROM ON HIS OWN

During Homebound Training sessions, Don has little time for his own work because of preparation for his classes. But after a session rolls by, he returns to his shop for commissioned work and drop-in business, such as antique furniture repair.

At home, Don seems as much philosopher as woodworker when he speaks of his own work. "Rather than force my ideas on a piece of wood, I look at it, then come up with an idea. I guess that reflects my sculptor's background," Don says, his eyes twinkling behind wire-rimmed glasses.

One of Don's ideas became the "box-with-a-hole," *right.* A piece of koa with a large knotty area missing inspired him. Many woodworkers would only have used the clear wood, but Don saw something more, and the "hole" became part of the finely crafted box.

"I like my original work to catch your attention, draw you in for a closer look, then surprise you with details," Don explains.

Details also catch your eye in Don's walnut settee, *top.*

The numerals on the backrest and leg startle you and intrigue you at the same time. Don cut them from hard maple with a jeweler's saw. To shape the inset area in the walnut, Don fitted a tiny router base to a modeler's Moto-Tool, then cleaned up the cuts with a carver's gouge.

This artist's trained eye is apparent not only in his custom-made pieces, but in his antique repair, too. "Looking at sculptural form over the years makes it relatively easy for me to copy an old turned leg, for instance," he explains. "I also find I'm pretty good at matching old finishes—so they don't look *too* new."

FINDING A DIFFERENT CHALLENGE IN DESIGN

Just as in his teaching, each custom piece represents a unique challenge, as individual students do. Don relishes both, even when his own work sometimes proves frustrating.

Above. **Don's walnut settee is rooted in Windsor-chair design. He made the backrest from laminated, ⅛″ strips, and inlaid maple numerals at random.**

Left. **Made of koa, with walnut on the top and cocobolo splines, Don's 6×6×4″ box immediately draws attention. He used the "defect" as part of the design.**

"When I can see that a project isn't coming together as I planned, I've learned to 'jury by band saw.' If I can't do something to save it, I'll make it into something else, even if it's BTUs for the woodstove," he says with a grin.

Sometimes, Don turns his design talent to tools or fixtures that make a woodworking operation simpler. As an example, he designed a shop-made thickness sander that appeared in *WOOD* (Oct. 1985, p. 48). A sliding fixture for doing cutoff work on the table saw was another. Don found that it worked well at home, so he introduced it to his workshop for the disabled as well.

The occasional client who gives Don some design freedom for a made-to-order piece gets a bargain. Don commits himself totally to the work, and the result shows it. Such commissions don't come along every day, but when they do, Don usually selects the wood as well as the style.

This craftsman doesn't have a favorite wood. Instead, he's more intrigued by the figure and color in particular boards than by any specific species. And he usually chooses the durability of Watco Danish oil for a rubbed-on finish.

BALANCING TWO CAREERS

Two woodworking shops, each totally different. Two challenges, completely dissimilar. Don Mostrom, the teacher. Don Mostrom, the sculptor-turned-woodworker. How does he balance his two worlds?

"I view my time at home, in the workshop behind the house, as a time to grow professionally by trying new techniques, new designs," Don says. "In my 'other' shop, I get just as involved with my students and their progress. It works out well."

Produced by Peter J. Stephano
Photographs: Perry Struse, Jim Kascoutas

Print this article

MAKE YOUR OWN PRECISION SCROLL SAW

For about $120 (not including the detachable jigsaw that supplies the power) you can assemble this ingenious scroll saw. The parallel-arm design gives you perfect cuts in even the most intricate patterns!

LAMINATING AND FORMING THE FRAME PARTS

The oak frame features open mortise and tenon joints. Oak dowels further lock the joints in position, giving the frame added strength.

1 Using ¾" oak stock, rip the frame pieces A through H to 3¼" wide. (Pieces are cut ¼" over width and trimmed to finished width after gluing.) Crosscut B, C, E, and H to finished length and A, D, F, and G to finished length plus 2".

2 Glue and clamp B between the two A's, as shown in the drawing, *right,* with the top of B 14" from the top end of the two A's. You'll trim the A's to finished length later.

3 Repeat the glue-up procedure for the bottom rail (C, D), sandwiching D between the two C pieces, as shown and dimensioned in the drawing, *right.* Using the same technique, glue up the two cross members (E, F) and the two front legs (G, H).

4 Scrape the dried glue from the frame members. With the straightest edge of each against the table-saw fence, rip all the frame members to 3⅛" wide. Move the fence, and rip the opposite edge of each to a 3" finished width. (You could also joint the first edge, rip the opposite edge ⅛" oversize, and then joint the sawed edge to obtain the 3" finished width.)

5 Mark both A's 3" from the bottom of B and 13⅜" from the top of B, and crosscut the A's to finished length. Mark and cut a 1½" radius on the top end of the rear leg (A, B).

6 Mark the location of the two arm-mounting holes on the rear leg where dimensioned in the Side-View Drawing, *right.* With a drill press and a ½" brad-point bit, drill the arm-mounting holes (using the drill press ensures that the holes are square with the face of A). Before drilling, insert a piece of ¾" scrap into the slot between the two A's and underneath it to prevent chip-out.

7 Cut the bottom rail (C, D), cross members (E, F), and front legs (G, H) to finished length.

8 Attach a dado blade to your table or radial-arm saw, and crosscut a ¾" dado ¾" deep in the center of the lower cross member where shown in the Exploded-View Drawing, *top right.* Now, cut a 3¾" dado ¾" deep across the top edge of the upper cross member.

9 Glue and clamp the rear leg to the bottom rail. Glue and clamp both cross members to both front legs. Check both assemblies for square, loosen the clamps, and resquare if necessary.

DESIGN NOTES

We fell in love with this idea the first time we laid eyes on it. Now that we've built and tested several prototypes, we're even more convinced that this project would be an excellent addition to any home shop.

Please note that cutting different thicknesses and types of wood varies the load on the saw. That's why we call for an electronic jigsaw to power this tool. Electronic models "sense" the load and keep the motor and speed constant, much like the cruise control function on many cars. The jigsaw must be capable of reducing the speed to 500 strokes per minute.

We used an AEG model BSPE60, but similar electronic models also will work (refer to the buymanship article and chart on jigsaws in the June, 1985 issue of *WOOD,* p. 32).

—James Downing
Design Editor

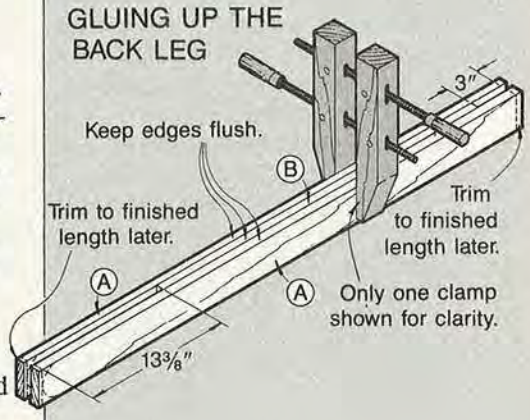

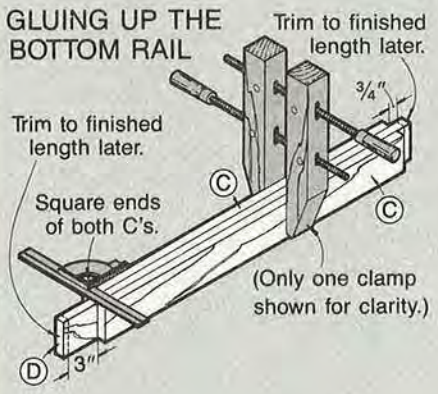

CUTTING DIAGRAM

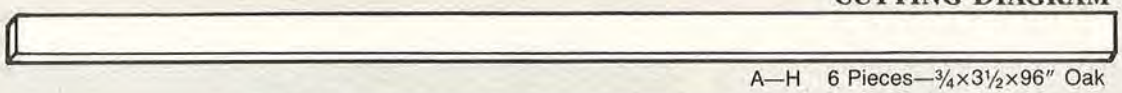

A—H 6 Pieces—¾×3½×96″ Oak

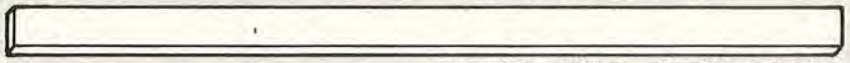

J and M 4 Pieces—¾×3½×72″ Oak

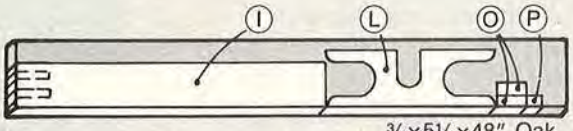

¾×5½×48″ Oak

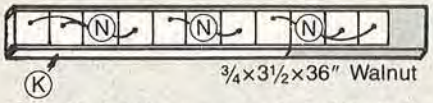

¾×3½×36″ Walnut

Parts K and N are resawn from ¾″ stock.

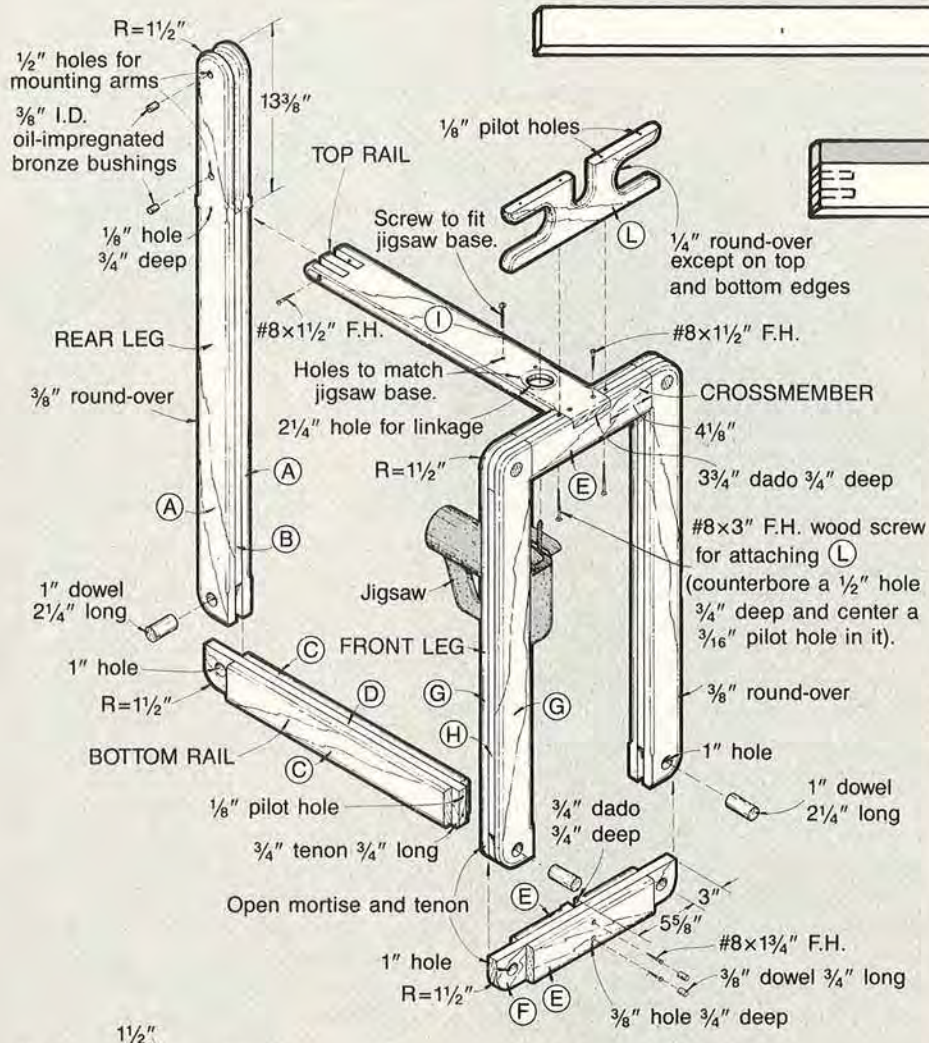

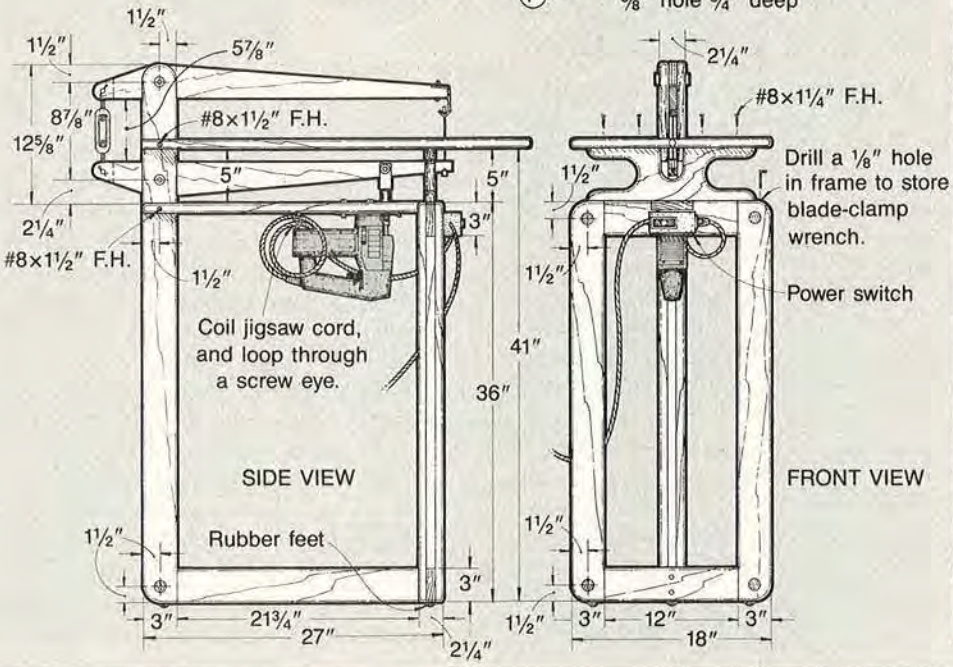

Bill of Materials

Part	Finished Size*			Material	Qty.
	T	W	L		
A*	¾″	3″	48⅝″	oak	2
B*	¾″	3″	32¼″	oak	1
C*	¾″	3″	21¾″	oak	2
D*	¾″	3″	25½″	oak	1
E*	¾″	3″	12″	oak	4
F*	¾″	3″	18″	oak	2
G*	¾″	3″	36″	oak	4
H*	¾″	3″	30″	oak	2
I	¾″	3¾″	27″	oak	1
J*	¾″	9″	35″	oak (laminated)	2
K*	¾″	⅛″	23″	walnut	1
L	¾″	5″	15″	oak	1
M*	¼″	3″	32½″	oak	4
N*	¼″	3″	3″	walnut	22
O*	¾″	1″	2½″	oak	2
P*	¾″	1″	1¼″	oak	1
Q	¾″ diam.		3¼″	dowel	1

*Parts marked with an * are cut larger initially, then trimmed to finished size. Please read the instructions before cutting.

Supplies: #6×1¼″ flathead wood screws, #8×1¼″ flathead wood screws, #8×1½″ flathead wood screws, #8×1¾″ flathead wood screws, #8×3″ flathead wood screws, roundhead machine screws with nuts/flat washers/lock washers for attaching jigsaw to part I (size depends upon the jigsaw you use), ½″ dowel, ⅜″ oak dowel, 1″ oak dowel, ⅜×9″ drill rod, ⅛×¾×10″ steel bar, 3/16×1″ machine screw with flat washer and self-locking nut, 6—⅜″ push caps, 2—⅜×2″ clevis pins with clips, 1—6⅜″ turnbuckle eye with eye, 3—rubber feet, 1—1″ radiator hose clamp, jigsaw blade with coarse teeth, 2″ screw eye

Continued

PRECISION SCROLL SAW

10 Drill a 1″ hole centered on each frame joint where indicated in the Front-View and Side-View Drawings on p. 33. Cut five 1″ oak dowels 2⅜″ long and glue them into the holes you just drilled. When the glue dries, belt-sand the dowels flush. Mark a 1½″ radius on the five joint corners. Then, using a band saw, cut the corners to shape. Sand out any saw marks.

ASSEMBLING THE FRAME

1 Cut the top rail (I) to size. Then, with a band saw or jigsaw, cut two notches ¾″ wide and 3″ long in one end of I where dimensioned in the Top-Rail Drawing. (We cut ours on the band saw, using the fence to keep the cuts straight.)

2 Also, mark the location of the 2¼″ hole on the top rail where shown in the Top-Rail Drawing, *right.* Using a hole saw, cut the hole (you could also drill a hole large enough for your blade and cut the hole to shape with a jigsaw). Now, position the jigsaw under the top rail and mark the location of the jigsaw-mounting holes. (The location and size of the jigsaw-mounting holes depends on the model of jigsaw you will use.) Drill the mounting holes through the top rail.

3 Rout a ⅜″ round-over along the sides of the top rail, except for the front 2¼″ where it will fit in the dado in the top cross member. Rout the edges of the 2¼″ hole.

4 Dry-clamp the frame members together. Drill and countersink ⅛″ pilot holes in the top rail and into the back leg where shown in the Parts-View Drawing, *top right,* and Exploded-View Drawing, p. 33.

5 Drill two ⅜″ holes ¾″ deep in the bottom cross member opposite the dado you cut earlier (see the Exploded-View Drawing). Then drill ⅛″ pilot holes centered in the ¾″ holes you just drilled.

6 Glue and clamp the entire frame assembly together, checking for square. Install #8×1¾″ screws through the bottom cross member (E, F) into the bottom rail (D) where shown in the Exploded-View Drawing. Cut two ⅜″ dowels 13/16″ long,

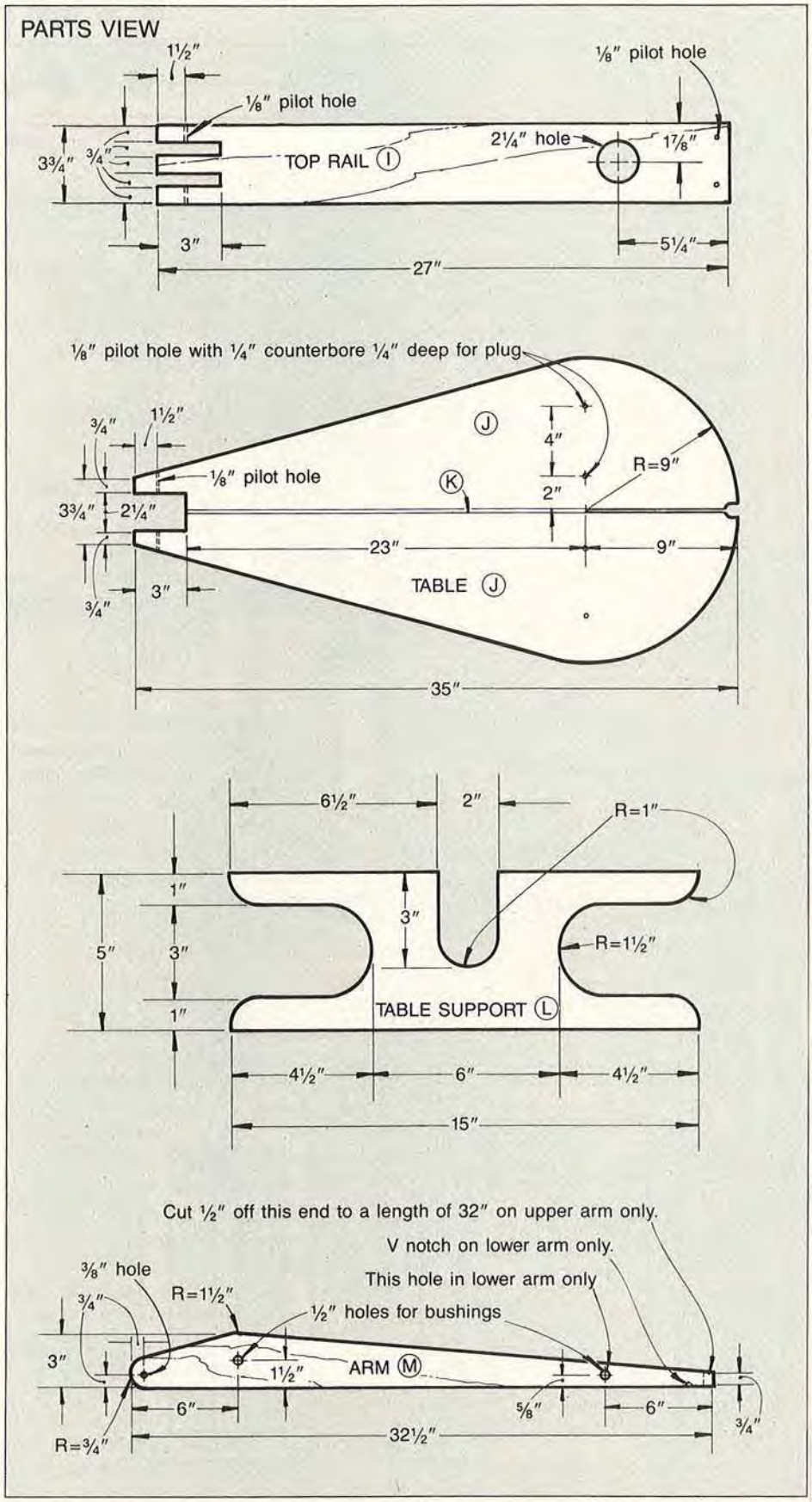

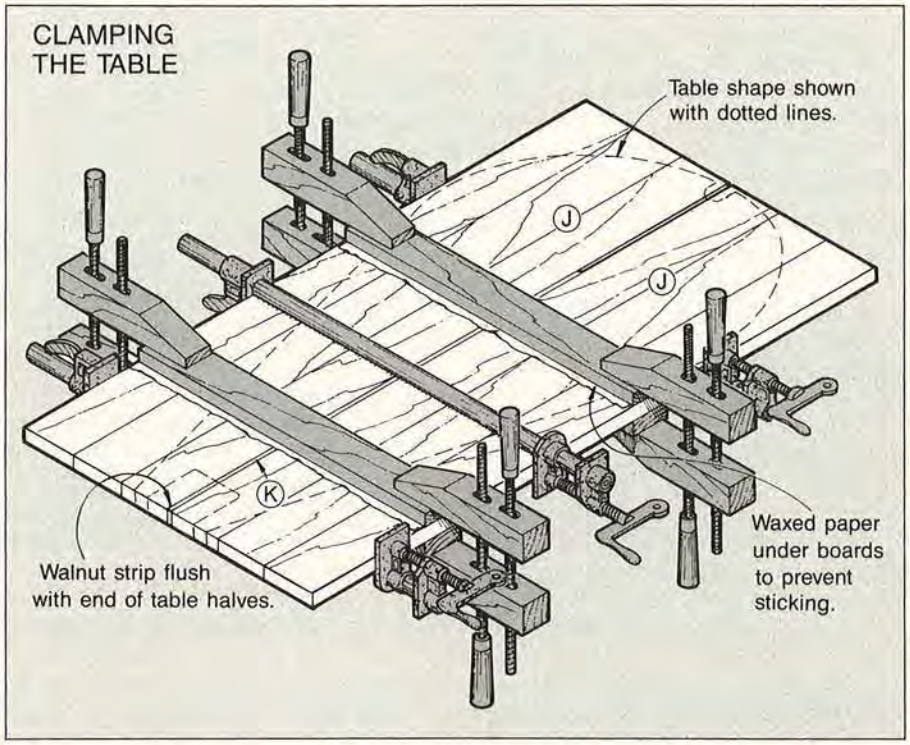

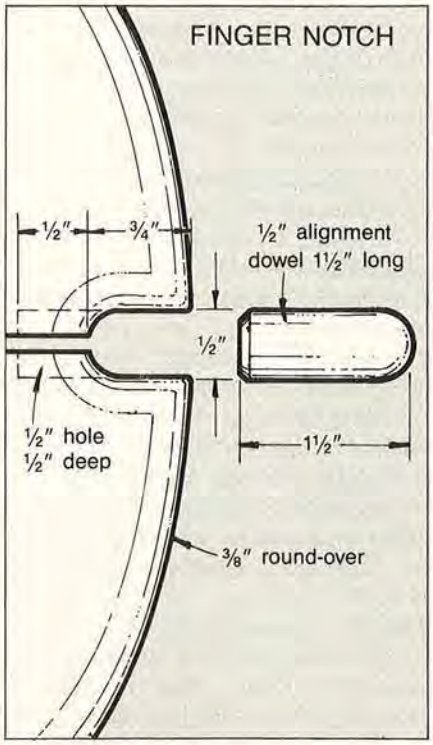

and glue them in place over the screws. When the glue dries, belt-sand the dowels flush and all the joints smooth.

7 Drive a #8×1½" screw through each side of the top rail into the back leg and through the top rail into the top cross member.

8 Rout a ⅜" round-over on all edges of the leg assemblies except where noted on the Exploded-View Drawing. Sand a slight round-over on the inside edges of both A's.

TIME FOR THE TABLE

1 Rip six pieces of ¾" oak to 3⅛" wide and crosscut to 36". Then glue and edge-join three pieces to form one table half (J); repeat for the other half. From ¾" walnut stock, rip and crosscut a strip ⅛×26" long for the contrasting center strip (K).

2 Glue and clamp the table halves and center strip together, with the center strip flush with one end of the two table halves. Clamp strips of scrap hardwood stock across the table assembly to keep it flat (see the drawing, *above*).

3 Lay out and mark the shape of the table and the location of the mounting holes where shown in the Parts-View Drawing of the table. Cut slightly outside the table outline with a jigsaw or band saw, then sand to the line for the finished shape. Cut the alignment notch to shape in the front end of the table where shown in the Finger Notch Drawing, *above right*. When fitted with the dowel later, the dowel will keep the surfaces of the table halves flush over the years.

4 Rout a round-over or bead along the edges of the table. Do not rout the notch where the table meets the rear leg.

5 Align and fasten a doweling jig to the front end of the table at the finger notch. Drill a ½" hole ½" deep in the alignment notch. Cut a ½" dowel to 1¼" long and insert it in the hole.

6 Use a drill press with a ¼" bit to counterbore the mounting screw holes ¼" deep where previously marked on the table. Drill ⅛" pilot holes centered in the ¼" holes you just drilled.

7 Using the Parts-View Drawing as a guide, lay out and cut the table support (L) to shape. Rout all but the top and bottom edges of the table support using a ¼" round-over bit. Screw the table to the support, and glue ¼" plugs 5/16" long over the screws. When the glue dries, sand the dowels flush, then dry-clamp the table assembly to the frame. (You'll attach the table permanently after the arms are fitted.)

CONSTRUCTING THE ARM ASSEMBLIES

Note: *You'll need ¼" oak and walnut to construct the arms. You can resaw your own or special order it. We have listed one source in the Buying Guide. To make the arms as strong as possible, the middle walnut strip of each arm is made up of several walnut pieces. The grain of the walnut pieces runs perpendicular to the grain of the oak pieces. For added strength to the arms, we used a slow-set epoxy to laminate the walnut pieces between the oak pieces.*

1 From ¼" stock, rip and crosscut the oak arm members (M) to size plus ½" in width and length. Cut the walnut pieces (N) to size plus ½" in length. Epoxy and clamp the walnut pieces between two oak pieces sandwich fashion, making sure that the end walnut piece is at least 1⅝" in from the ends of the oak pieces to form a 1½"-long open mortise.

Continued

Repeat this process for the other arm. (If the oak pieces are slightly warped, laminate them so that they bow in opposite directions to avoid further warping.)

2 Measure and mark the shape of both arms and the location of the holes where indicated in the Parts-View Drawing of M. Cut the arms to shape on a band saw, then sand the edges smooth.

3 Label one arm "upper" and crosscut ½" from the front end. Cut a 1½"-long rabbet ⅛" deep in the front end of the upper arm where shown in the Arm-Assembly Drawing to house the blade holder. (We used a table saw and miter gauge and made several passes to cut the ⅛"-deep rabbet.)

4 With a ½" brad-point bit mounted in your drill press, drill two bushing holes in the lower arm and one in the upper arm where previously marked. Switch to a ⅜" brad-point bit, and drill a clevis-pin hole in each arm.

5 With a fine-toothed handsaw, cut a thin kerf 1" long in the front end of the lower arm to accommodate the scroll-saw blade.

6 Following the sequences in the drawing, ***below right,*** bend, cut, and drill the holder from a 10" length of ⅛×¾" steel bar. Clamp the blade holder in place on the upper arm, and drill a 3/16" hole through the holder and arm where shown in the Arm-Assembly Drawing. Bolt the blade holder to the arm with a 3/16×1" machine screw.

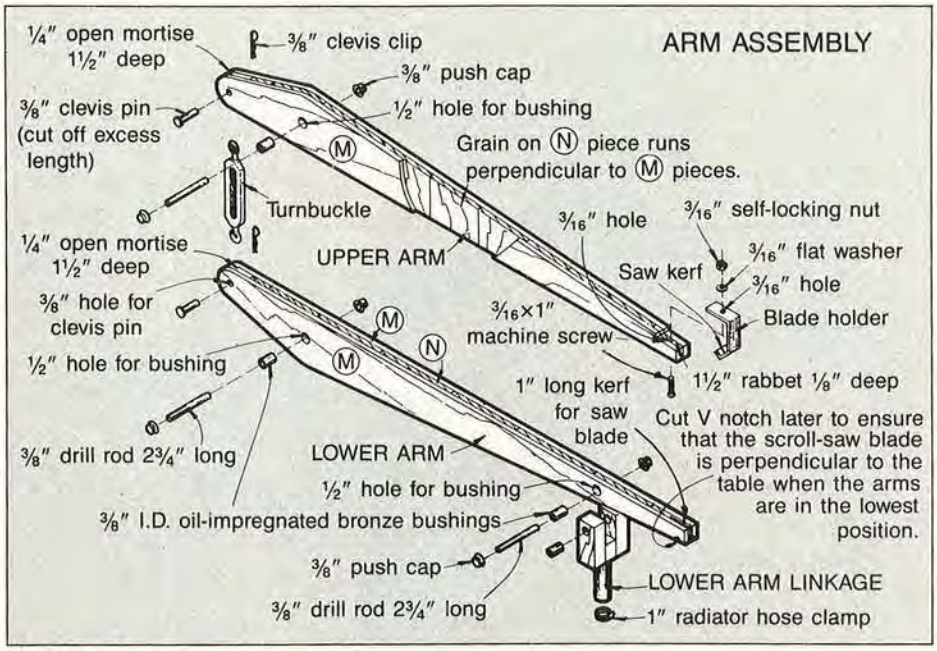
ARM ASSEMBLY
¼" open mortise 1½" deep
⅜" clevis clip
⅜" push cap
½" hole for bushing
⅜" clevis pin (cut off excess length)
Grain on (N) piece runs perpendicular to (M) pieces.
Turnbuckle
3/16" hole
3/16" self-locking nut
3/16" flat washer
3/16" hole
Saw kerf
UPPER ARM
¼" open mortise 1½" deep
⅜" hole for clevis pin
3/16×1" machine screw
Blade holder
½" hole for bushing
1" long kerf for saw blade
1½" rabbet ⅛" deep
Cut V notch later to ensure that the scroll-saw blade is perpendicular to the table when the arms are in the lowest position.
⅜" drill rod 2¾" long
LOWER ARM
½" hole for bushing
⅜" I.D. oil-impregnated bronze bushings
⅜" push cap
LOWER ARM LINKAGE
⅜" drill rod 2¾" long
1" radiator hose clamp

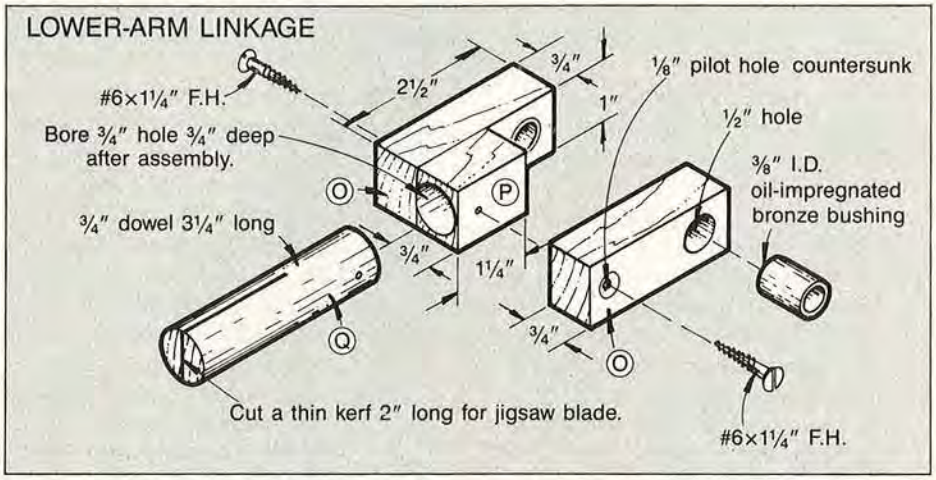

MAKING THE LINKAGE

1 Rip a piece of ¾" oak to 1", and crosscut it to 12". Cut the lower-arm linkage parts (O, P) to length from the 12" piece.

2 Glue the parts (O, P) together where shown in the Lower-Arm Linkage Drawing. Clamp the parts in a small handscrew, and drill a ¾" hole ¾" deep, centered in the end of P.

3 Reposition the assembly in the handscrew, and drill the ½" bushing holes through both O's with a brad-point bit. (We placed a ¾" piece of scrap between the two O's to prevent chip-out. Drilling completely through both pieces at one time ensures that the holes will line up.)

4 Cut Q to 3¼" from ¾" dowel stock. Glue Q into the ¾" hole in P where shown in the Lower Arm Linkage Drawing. Drill the pilot holes, and install the screws.

5 Cut a thin kerf 2" long in the end of Q. (We laid the linkage assembly [O, P] flat on the band saw table, and then cut the kerf.)

FINAL ASSEMBLY AND SETUP

1 Carefully press-fit the ⅜" bronze bushings (see the Buying Guide for purchasing details) into the ½" holes in the rear leg, both arms, and the lower-arm linkage. (We gently pushed the bushings in as far as we

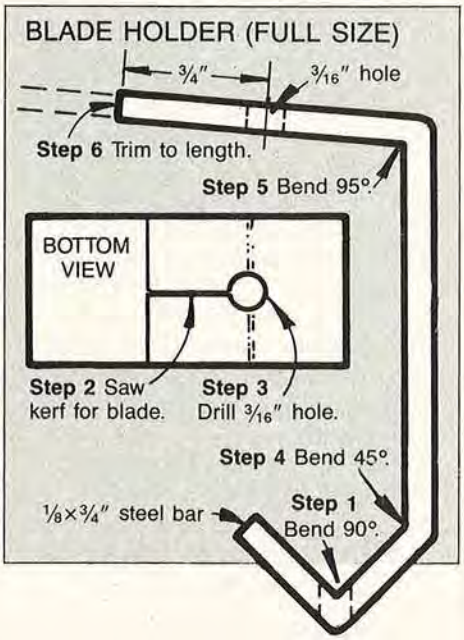

could by hand. Then, we placed a scrap of wood on the protruding end of each bushing and lightly tapped it in the rest of the way with a mallet. Do *not* strike the bushing directly because you could easily bend it out of shape.)

2 Cut the drill rod and clevis pins to the lengths given in the Arm-Assembly Drawing. (We used drill rod because it is made to higher tolerances than ordinary steel rod and causes less wear on the bushings.) Grind or file the cut ends of each rod smooth.

3 Assemble the scroll saw, inserting the ⅜" drill rods, turnbuckle, and clevis pins where shown in the Arm-Assembly Drawing. Attach the linkage to the lower arm. Position the table assembly (J, K) on the base. Do *not* install the push caps yet.

4 Bolt an electronic jigsaw to the bottom of the top rail so that the blade mounted in the jigsaw will fit straight into the kerf in linkage dowel Q.

5 Slip a 1" radiator-hose clamp onto the linkage dowel. Extend the jigsaw blade to its maximum and insert the blade into the saw kerf in Q. Adjust the linkage on the jigsaw blade so that the lower arm clears the bottom of the table bottom by at least ⅛". Drop the hose clamp to the bottom of the dowel and tighten the clamp to hold the jigsaw blade firmly in the kerf in the dowel.

6 Fasten a blade clamp to each end of a scroll-saw blade with a metric blade-clamp wrench (see the Buying Guide for ordering details for both the blade clamps and the wrench). (To mount the blade in the blade clamps without bending, we first finger-tightened the blade into the clamps. Then, we mounted the blade-clamps assembly in a woodworker's vise and finished tightening the blade-clamp screws with the metric-clamp wrench.)

7 Move the arms to the full "down" position, and fit the upper blade clamp into the blade holder on the upper arm. Slide the lower blade clamp into the kerf in the lower arm until the scroll-saw blade is perfectly square with the table. Mark the location of the lower blade clamp V notch. The location of the notch is critical to keep the blade square with the table. Disassemble and remove the lower arm. Finally, cut a V-shaped notch 3/16" deep on the bottom side of the lower arm to house the lower blade clamp.

8 Reattach the lower arm to the scroll-saw assembly.

9 Slip the lower blade clamp and the scroll-saw blade (with the teeth pointing down) through the kerf and into the V notch in the lower arm. Position the upper blade clamp into the kerf in the blade holder fastened to the upper arm.

10 Apply tension to the blade by turning the turnbuckle at the rear of the arm assembly. You'll want to tighten the blade until it "twangs" when plucked. Beware of overtightening the blade via the turnbuckle and placing undue stress on the arm assemblies. Go easy.

11 Adjust the position of the table assembly (I, J, K) so that the scroll-saw blade is centered in the groove between the table halves. Now, screw the table assembly to the frame's top cross member and secure the table to the rear leg with #8×1½" screws (see the Exploded-View Drawing).

12 With the jigsaw set at its slowest speed, briefly switch it on to ensure that everything runs smoothly. If the bottom arm strikes the bottom of the table, loosen the hose clamp and slide the jigsaw blade deeper into the kerf in Q, then retighten the clamp and retest.

13 Disassemble the arms and linkage. Mask the bushings with tape to protect them from the finish. Finish-sand the entire scroll saw, then apply several coats of polyurethane, rubbing with steel wool between coats.

14 Reassemble the saw and attach the push caps on the ends of the drill rods. Attach the power switch and the rubber feet to the scroll saw where shown in the Front-View Drawing. Remount the jigsaw onto the bottom of the top rail, and plug it into the power switch. Attach a 2" screw eye to the bottom of the top rail, and loop the excess jigsaw cord through it. Drill a ⅛" hole in the frame to house the blade-clamp wrench. Plug the cord from the power switch into an outlet.

USING THE SCROLL SAW

To get used to the saw, set the jigsaw at its slowest setting. As a general rule, cut thin stock at slower settings and thick stock at faster settings.

Do not exceed half the maximum speed of the jigsaw. Experiment with different speeds and thicknesses of woods to find out what works best for you. You will need to hold the workpiece firmly on the table when cutting—there's a slight tendency for the work to jump up and down with the blade. (See the December, 1985 issue of *WOOD,* p. 54, for more information on scroll saws and how they work.)

BUYING GUIDE

● ***Jigsaw.*** We used an AEG electronic, 300-3200 SPM model. Catalog no. AEBSPE60, $127.95. Trendlines, 375 Beacham St., Chelsea, MA 02150 (800/343-3248).

● ***Precut bronze bushings.*** 9—⅜" (inside diameter) × ½" (outside diameter) × ¾" length. Oil-impregnated. Stock no. P38-6, $1.67 each. Standard Bearings, P.O. Box 823, Des Moines, IA 50304 (515/265-5261).

● ***Blade clamps.*** 0.7-mm slot blade clamps, $10/pair. 3-mm wrench for blade clamps screw, 75 cents. Pebeco saw blades, #1 thru #9, $4/dozen. AMI Ltd., P.O. Box 312, Newcastle, DE 19720 (302/322-2226).

● ***Power-tool switch.*** Pull on/push off, stock no. #9HT13632. $24.99 from Sears. Call your local Sears store.

● ***Thin stock.*** ¼" red oak stock, 5½×36" strip, stock no. W4057, $7.95. ¼" walnut stock, 5½×36" strip, stock no. W4657, $9.66. Craftsman Wood Service Company, 1735 W. Cortland Ct., Addison, IL 60101 (312/629-3100).

Produced by Marlen Kemmet
Project Design: Randall Foshee
Photographs: Jim Kascoutas
Illustrations: Randall Foshee; Bill Zaun

FABULOUS FINISHES

TOP CARVERS' PROVEN TECHNIQUES

Basswood, pine, and tupelo—they're all great carving woods that take the finest detail. But when it comes to fancy figure or appealing hue, these woods rate as plain-Jane. That's why knowing carvers master coloring and finishing techniques that are tailored to their carving style and the lackluster wood.

To a woodcarver, the most important reason for applying a finish is to highlight the details lovingly cut into the wood. Here, you'll find out how three top carvers finish their work. Each uses a finishing method mated to his carving technique—read on and adapt their ideas in your own workshop.

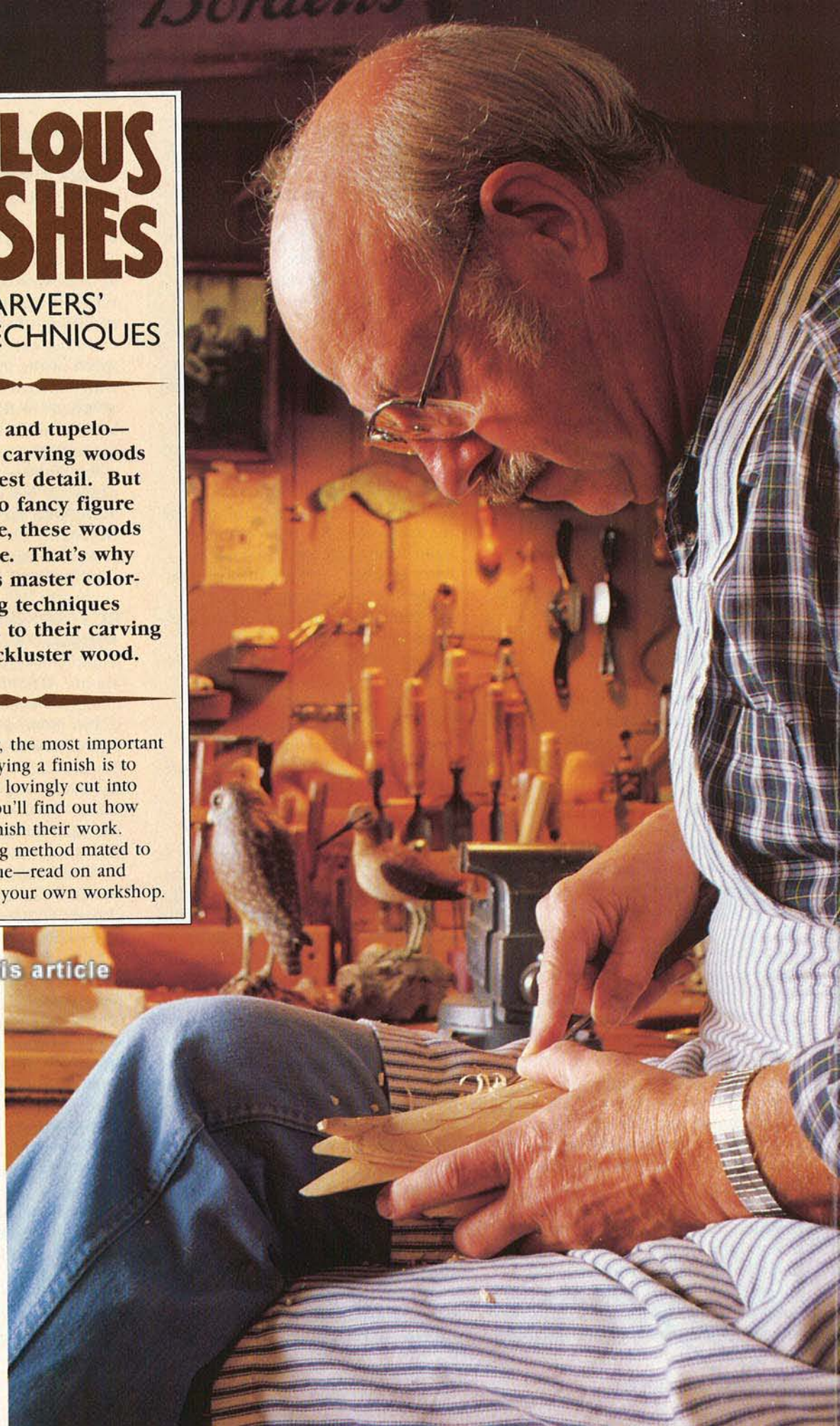

Print this article

Del Smith

Realism with solid color

In his Otis, Oregon, workshop, Del Smith, *left,* has crafted full-sized decorative wildfowl since he took an early retirement 12 years ago. His work, featured up and down the West Coast, sells for $300 to $5,000, and the demand keeps Del busy. In his carvings, Del opts for basswood because it carves easily and because it soaks up paint better than the pine he once carved in. For the opaque, solid color that imitates plumage on his subjects, Del chooses acrylics purchased at art supply stores.

Del obtains rich, often bright, natural shades. Yet his painting retains a soft, featherlike appearance that doesn't build up in thickness and obscure the detail he has carved in. To get that, Del developed a special "wet-on-wet" painting technique that allows him to blend colors right on the carving without artificially distinct and unnatural lines.

Unlike oils, which take a long time to set up, acrylics dry quickly, making them difficult to blend unless they are thinned. "I thin the paint way down with water until it becomes a weak, lightly colored wash. 'Wet-on-wet' means I put another coat of color down before the previous one dries. How many coats I put on depends on the color, the detail underneath, and the grain of the wood," Del tells us. "On end grain, which absorbs and holds color, I might only have to use four coats. On other areas there may be eight to 12 in order to achieve the same overall color."

Del prefers painting on unprimed, unsealed wood because it draws in the paint for a more subdued effect. Sealed wood (coated with a sanding sealer, for instance) gives paint a brighter tone, which in his work, translates to unnatural.

"I paint with only a few different sizes of round, sable-hair brushes—a no. 6, no. 4, and a no. 2 for details, which I dry-brush on. That means paint straight out of the tube, no water. For large, same-color wash areas, I turn to a ½" flat brush," Del adds. "And, I keep a blow-dryer handy to speed up the drying process."

Because Del's painted wildfowl carvings aren't meant to be handled, he doesn't worry about a final protective coat.

Continued

Left. **For wildfowl carvings such as this lesser yellow-legged sandpiper, Del paints on layers of thinned acrylics. This technique gives his birds a natural look without covering carved-in detail.**

FABULOUS FINISHES

Harley and Norma Refsal

Muted colors enhance a rugged carving style

In Harley Refsal's experienced hands, basswood becomes rural immigrant figures and caricatures of folks engaged in outdoor sports or hobbies (see "Scandinavian-Style Figure Carving," *WOOD,* April 1985, p. 70). The distinctive carvings prove popular at ethnic festivals and art shows throughout the Midwest.

Harley, who's a full-time college instructor and adviser, wants his carvings painted—but just enough so that the wood grain remains evident. Muted colors couple with his flat cuts to emphasize rugged origins.

"We use acrylics because, when thinned, they perform as softly colored stain. And, you can paint the piece in one sitting," Harley says.

Norma, Harley's wife, does most of the actual painting, and brushes the thinned colors directly on the unsanded wood. "I mainly use the primary colors or earth tones: cadmium red, yellow ocher, forest green, and brown umber," Norma comments. "Good synthetic brushes work exceptionally well. I like to paint with ¼"- and ⅛"-wide, flat chisel brushes. The squared edges make it easy to bring one color right up against another. I do use a no. 000 pointed brush for details, and an old, beat-up one just to dry-brush extra color on a nose, for instance."

After the paint has thoroughly dried, Norma puts on a special oil finish just right for Harley's figures. "We use boiled linseed oil with a little umber oil paint added to produce a warm, antique look on the carving," she says. On Harley's "Wooden Bird Carver," *right,* you can see how the slightly darkened oil deepens detail and makes a "shadow."

Above. **Norma does most of the figure painting in the Refsal shop.**

Below. **End grain absorbs color, as on this figure's shoulder. But Harley considers it an accent technique. Note how the grain shows through the thinned paint.**

Inset. **With its sharp, angular lines, this carving by Harley Refsal needs only the hint of color. Thinned acrylics, followed by darkened oil, do the trick.**

Phil Odden

Dramatizing natural grain

Relief carving on plaques and furniture features intricate undercuts, flowing lines, and patterns. The carving goes both with and against the grain. Wood-colored stains enhance these crafted-in details as they darken end-grain areas and settle in deep cuts.

Phil Odden and Else Bigton, furniture-makers and carvers from Barronett, Wisconsin, choose stains to intensify their Scandinavian-style acanthus carving. The intertwining plant motifs of the acanthus style decorate the furniture they make of basswood, pine, and occasionally birch.

When one of their pieces, such as the *kubbestol* (log chair) shown at left, reaches the finishing stage, they first "paint" the non-carved, sanded areas by flooding them with cold water. This technique is often used by other woodworkers in finishing to raise the tiny, hair-like wood fibers. Then, resanding smooths the surface.

"For staining, we like to use products that don't give off noxious fumes, such as aniline dyes made from organic compounds and commercial water-base stains," says Phil. "Of course, you can mix anilines with alcohol or turpentine, but we mix with water." Aniline dyes, long used in Europe for staining, now can be ordered here from major mail-order woodworking suppliers.

Phil has another equally important reason for using water-mixed dyes and stains, however: They perform better on basswood, pine, and birch. "On uncarved areas, the wood fibers seem to wander in direction and take the stain differently. With water-mixed dyes and stains, we can blend these differences more easily."

When applying coloring stain, Phil works from the bottom of the piece to the top with a sponge. "The entire piece must be evenly coated, with no overlapping or there will be dark streaks," he says.

After the stain has dried, Phil goes over high spots in the carving with 240- to 320-grit sandpaper. "This creates an additional color contrast with the depth of the carvings," notes Phil. "Because water-mixed stains and dyes don't penetrate wood as deeply as oil-base products, we can sand some off."

At their shop, Phil and Else prefer using penetrating oil finishes. Oil gives their furniture a soft-looking, low-luster finish, but one that stands up to abuse. When it dries, oil actually hardens in the outer wood so that it can be knocked and banged. Spots can be touched up without complete refinishing.

Above. **Hewn from the trunk of a basswood tree, this *kubbestol* was carved in high relief by Phil Odden. He and Else Bigton use water-base stains and dyes to give the wood warmth.**

Top. **Now Wisconsin-based, Phil learned to carve in Norway.**

Below. **For highlights, some of the stain in flat areas is sanded off. Oil protects the work.**

Final finishing pointers

Always keep in mind that an improperly applied or unwisely chosen finish could ruin a nicely carved piece. Here are some tips:

- Experiment with a finish on scrap wood first.
- Keep fine brushes in shape (literally) by cleaning them thoroughly after use, then dipping them in soapy water. Form pointed tips with your fingers and as the soap dries they'll retain the shape. (Be sure to rinse soap out before use.)
- Don't overfinish. Solid colors build up and can obscure detail.

Photographs: Ron Cooper, Jim Kascoutas, Chip Peterson, Del Smith, Peter J. Stephano
Produced by: Peter J. Stephano; Harley J. Refsal

TOWING
24 HR
ATV
ATV

Print this article

No Job Too Small!

TUFF-STUFF TOW TRUCK

Need a lift? Then delight a special youngster with this toddler-sized tow truck. It maneuvers playroom byways with ease and takes lots of abuse, just like the big ones. (We know because 2½-year-old Justin road-tested ours right here in the *WOOD* Shop.) Best of all, each tow truck comes with a full, 5-year, 5,000-smile warranty.

Note: *If your tow truck will be used outdoors, we recommend a slow-set epoxy adhesive. Otherwise, use woodworker's glue. Either way, be sure to epoxy the steering wheel to the steering dowel.*

BUILDING THE CHASSIS

1 Lay out and cut the chassis base (A) and boom support (B) to shape using the Parts-View Drawing of each as a guide. Cut the notch in B with a band saw or jigsaw. (Do *not* drill the ¾" holes in A or B yet.)

2 Rout a ⅜" round-over on the top and bottom edges of the tail end of the chassis where shown in the Chassis-Assembly Drawing, *below.* Glue and clamp B onto A, keeping the front ends flush.

3 To make the axle housings (C, D), rip a 30"-long piece of ¾" oak to 2". Then, crosscut the board in half, leaving two boards just under 15" long. Cut or rout a ½" groove ½" deep, centered down the length of one face of one of the boards. Now, cut one C and one D from each 15" board to the lengths listed in the Bill of Materials.

4 Glue and clamp the two C's together and the two D's together, with the grooves facing out and the edges flush.

5 Measure and mark the location of the rear-axle housing (C) on the bottom of the chassis base (A) where dimensioned in the Parts-View Draw-

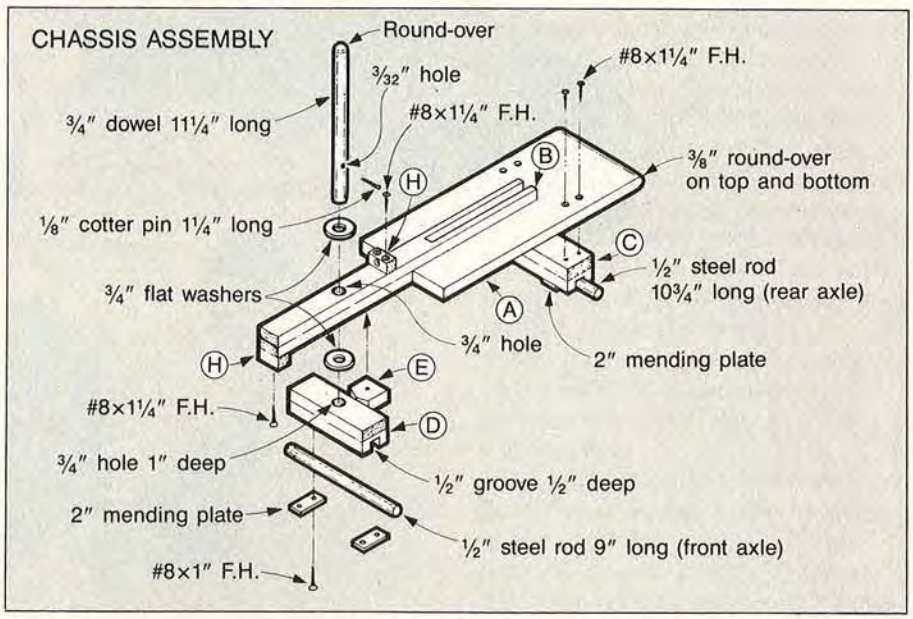

Continued

TUFF-STUFF TOW TRUCK

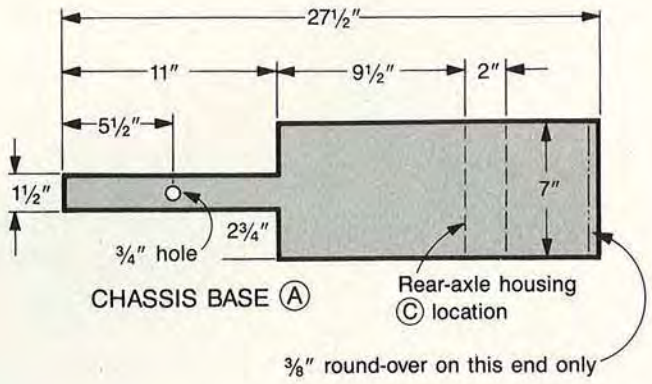

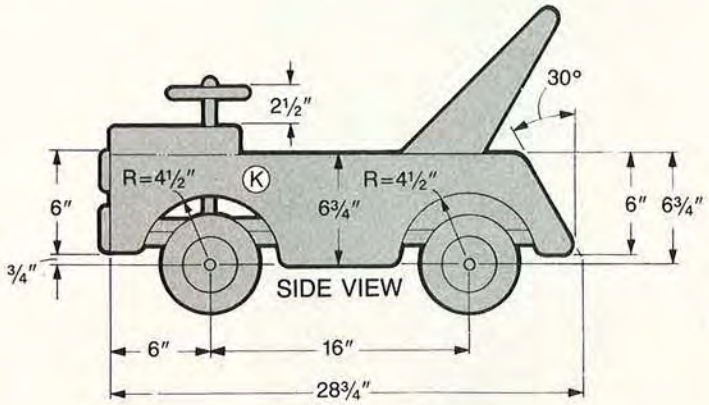

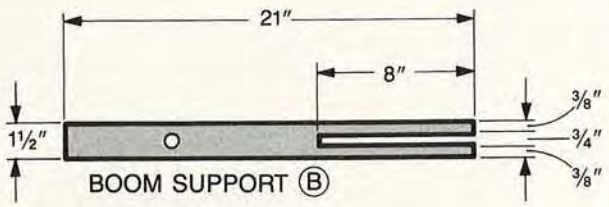

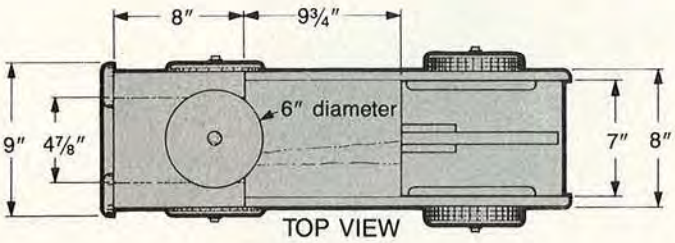

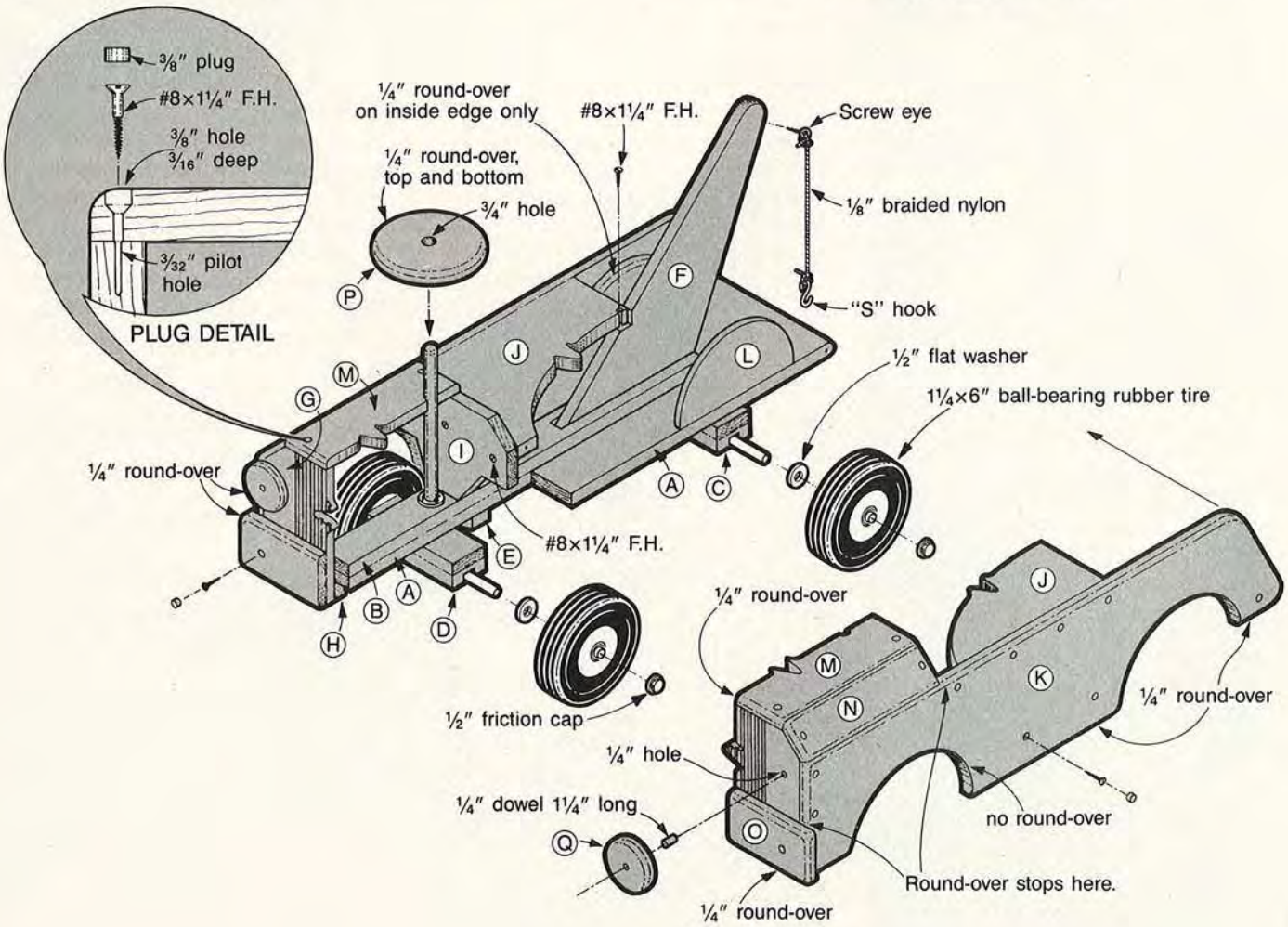

CUTTING DIAGRAM

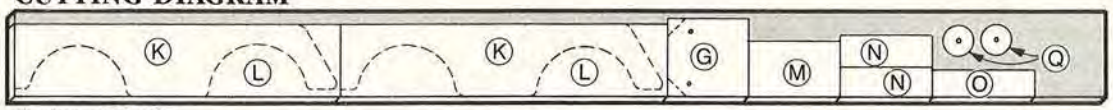

½×7¼×96″ Pine

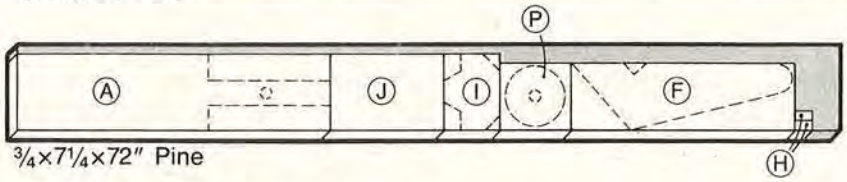

¾×7¼×72″ Pine

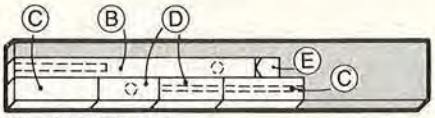

¾×5½×36″ Oak

Bill of Materials

Part	Finished Size*			Material	Qty.
	T	W	L		
A	¾″	7″	27½″	pine	1
B	¾″	1½″	21″	oak	1
C*	1½″	2″	7¼″	oak (laminated)	1
D*	1½″	2″	5½″	oak (laminated)	1
E	¾″	1½″	2″	oak	1
F	¾″	5⅜″	20″	pine	1
G	½″	7″	7″	pine	1
H	¾″	¾″	1½″	pine	2
I	¾″	7″	4¾″	pine	1
J	¾″	7″	9¾″	pine	1
K	½″	6¾″	28¾″	pine	2
L	½″	4½″	9″	pine	2
M	½″	4⅞″	8″	pine	1
N	½″	2¼″	8″	pine	2
O	½″	2½″	9″	pine	1
P	¾″	6″ diam.		pine	1
Q	½″	2½″ diam.		pine	2

*Parts marked with a * are cut larger initially, then trimmed to finished size. Please read the instructions before cutting.

Supplies: #8×1″ flathead wood screws, #8×1¼″ flathead wood screws, #8×2″ flathead wood screws, ¾″ dowel stock (oak or birch), 2—¾″ flat washers, 4—2″ mending plates with predrilled holes and screws (Stanley catalog no. CD995-R—2″), ⅛″ cotter pin 1¼″ long, 4—½″ flat washers, 4—½″ friction caps, 4—1¼×6″ ball-bearing rubber tires, ½×20″ steel rod (for axles), ⅛″ braided nylon (for tow rope), 1″ S hook, 1—small (#10) screw eye, paraffin, wood putty, sanding sealer, oil-based exterior enamel paint—flat black and gloss yellow

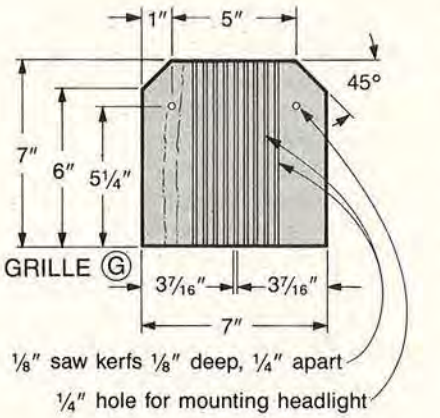

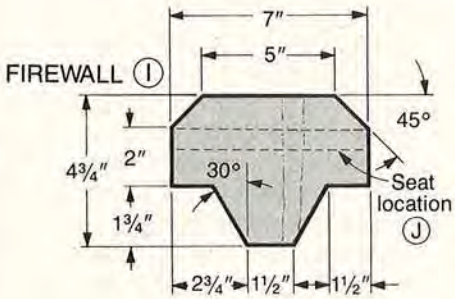

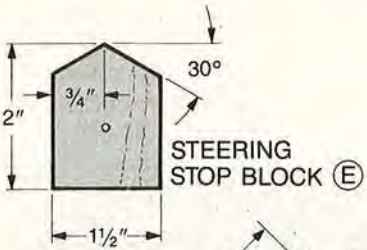

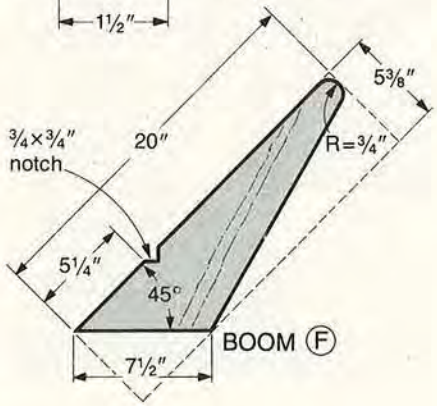

ing of A, *opposite page*. Clamp the housing to the base (the housing should protrude ⅛″ beyond each side of the base). Drill pilot holes through the base and into the housing, remove the clamps, and glue and screw C to the bottom of A.

6 Draw diagonal lines on the top of the front axle housing (D) to locate its center. Bore a ¾″ hole 1″ deep at the marked center point in the top of D for the steering dowel. Using the Parts-View Drawings of A and B as a guide, mark the location of the steering dowel hole, and bore a ¾″ hole through the A–B assembly.

7 Cut the ¾″ hardwood steering dowel to length (11¼″). Then, hand-sand a round-over on one end of the dowel to simulate a horn button.

8 Epoxy the steering dowel into the front-axle housing (D), making sure that it's perpendicular to the housing. Rub paraffin on the bottom 2″ of steering dowel and in the ¾″ hole in the A–B assembly (the paraffin makes turning easier).

9 With a hacksaw, cut the front and rear axles to length from ½″ steel rod, where dimensioned in the Chassis-Assembly Drawing.

10 Attach a friction cap to one end of each axle. Now, slide a ball-bearing tire, two ½″ flat washers, another tire, and the other friction cap onto each axle. Position each axle assembly in its housing with a washer and wheel at each end. Drill pilot holes and screw two mending plates to the bottom of each housing to secure the axle assemblies. With the truck carcass on its side, use a mallet to drive the friction caps tighter onto the ends of the axles. This eliminates excessive play between the rubber tires and the axle housings.

11 Referring to the appropriate Parts-View Drawing, mark the shape of the steering-stop block (E) on a piece of ¾″ oak, and the shape of the boom (F) on a piece of ¾″ pine.

Continued

TUFF-STUFF TOW TRUCK

For maximum strength, lay out the boom with the grain running the length of the piece where shown in the Cutting Diagram, p. 45. Cut both pieces to shape (don't forget to cut the notch in the boom).

12 Insert the steering assembly through the hole in the A–B assembly, placing ¾" flat washers above and below the housing. Glue and screw the steering stop block (E) to the bottom of the chassis base as shown in photo A, *bottom right.*

(We positioned the stop block ¼" away from the back edge of the front steering housing.)

13 Flip the chassis upright. Then, clamp a handscrew to the front tire to keep the chassis from rolling around. Drill a 3/32" hole above the top washer to accept a cotter pin as shown in photo B, *far right.*

14 Glue the boom (F) in the notch in the chassis assembly.

FASTENING THE GRILLE AND FIREWALL TO THE CHASSIS

1 Using the Parts-View Drawing of the grille (G) as a guide, lay out and cut the grille to shape. Cut ⅛"-wide kerfs ⅛" deep in the grille front to simulate a real grille. (Using a table saw and the rip fence, we cut the middle kerf first. Then, we moved the fence ¼" away from the blade and cut a kerf on each side of the first, and so on.) Drill two ¼" holes where located on the drawing for the headlights that you will mount later.

2 Cut two cleats (H) to size. Drill a pilot hole through one, and screw it to the bottom of A, flush with the front. You will use the other cleat later to install the firewall (I). Now, glue and clamp the grille (G) to the front of the chassis, flush and square with the bottom of the cleat.

3 Use the Parts-View Drawing of the firewall (I) to mark and cut its shape on a piece of ¾" pine. Mark the position where the seat will be mounted against the firewall later, as dimensioned in the drawing. Position the firewall directly behind the grille, and check that the top profiles of both are the same. Sand as necessary to match the profiles.

4 Drill a pilot hole in the remaining cleat (H), and glue and screw it to the backside of the firewall (I). Glue and screw the firewall and cleat to the chassis assembly. (Before mounting the firewall, we used a straight piece of wood to check that the side edges of the grille, firewall, and sides of the chassis all lined up for flush-mounting of the side panels later.)

ADDING THE SEAT, SIDE PANELS, SPLASH GUARDS, AND HOOD

Note: *For a satin-smooth paint job, we used ⅜" wood plugs over all exposed screws. See the Plug Detail on the Exploded-View Drawing for drilling dimensions.*

1 Cut the seat (J) to size as dimensioned in the Bill of Materials. Position it in the notch in the boom (F) and against the firewall where marked. Drill pilot and plug holes, then glue and screw the seat to the boom. Glue and toe-screw the seat to the firewall, as shown in the photo C, *opposite page.*

2 Using the Side-View Drawing as a guide, lay out the shape of one side panel (K) on ½" pine. Cut the panel to shape with a band saw or jigsaw (take care when cutting the rear wheel well—you will use the remaining cutout for the splash guard [L]). Using the first panel as a template, mark and cut another panel and splash guard to shape.

3 Rout a ¼" round-over on the edges of each side panel, where shown in the Exploded-View Drawing. Stop the round-over where the side panels meet the hood, where the front bumper covers the side panels, and at the wheel wells.

4 Rout a ¼" round-over on the inside edge of each splash guard (L), leaving the bottom edges square. Glue and clamp the splash guards flush with the chassis (A), centered over the rear axle.

5 Clamp the side panels against the chassis frame (make sure they are flush with the front of the grille and flush with the top of the seat). Remove the clamps, and spread glue on the mating areas of the side panels and chassis frame. Reclamp the side panels in position on the chassis frame. Drill pilot and plug holes, and screw the side panels to the chassis frame.

6 Cut the hood top (M) to size. Drill pilot and plug holes, and glue and screw the hood top to the top of the grille and firewall. Then, cut the hood side panels (N) to size, bevel-ripping the edges at 45°. (The beveled edges will protrude over the side panels and hood—you'll plane and sand these flush later.) Drill

pilot and plug holes, and then glue and screw the hood side panels to the grille and firewall as shown in photo D, *below.*

7 Using a block plane, plane the protruding edges of the hood side panels almost flush with the side panels (K) and hood top (M). Now, sand the hood panels flush.

8 Rout a ¼" round-over along the front edge of the hood, hood side panels, and side panels, again stopping where you will attach the bumper later.

9 Cut ⅜" pine plugs with a plug cutter, or cut lengths of ⅜" dowel. Plug all the screw holes, and sand the plugs flush.

10 Fill all gaps with wood putty and finish-sand the chassis assembly. (We usually finish-sand just before we apply the finish, but it's easier in this instance to sand before attaching the bumper.)

NOW FOR THE FRONT BUMPER, STEERING WHEEL, AND HEADLIGHTS

1 Cut the front bumper (O) to size. Rout a ¼" round-over along its front edges and finish-sand. Drill pilot and plug holes, and glue and screw the bumper to the front of the grille, with the bottom edge of both being flush. Plug the holes and sand the plugs smooth.

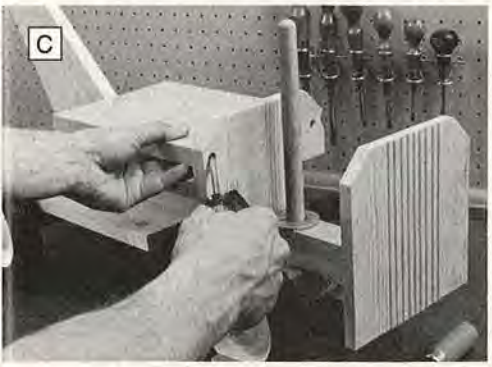

2 Using a compass, mark the 6"-diameter steering wheel (P) and cut it to shape. Drill a ¾" hole through the center of the steering wheel (use the same center point you used to mark the circle). Sand out the saw marks along the outside edge of the steering wheel, and rout a ¼" round-over along the top and bottom edges. Finish-sand the steering wheel.

3 Using a hole saw or circle cutter, cut two 2½"-diameter headlights (Q). Glue a 1½" length of ¼" dowel stock into the center hole in each headlight, keeping one end of the dowel flush with the front surface of the headlights. After the glue dries, chuck the dowel into your drill press. Turn the drill press on, and sand a round-over on the front edge of each headlight.

GETTING READY FOR THE ROAD

1 Remove the tire/axle assemblies from the housings (C, D), and remove the steering dowel/front axle housing from the chassis.

Note: *Paint the tow truck the "easy way," or spend a little more time, money, and paint for the "deluxe treatment." Either way, use an exterior oil-based enamel paint for a durable, long-wearing finish.*

● ***The easy way.*** Apply a coat of sanding sealer to all the wood parts (including the steering wheel and headlights). Follow with two coats of exterior enamel.

● ***The deluxe paint job.*** We stained wood-grained areas on each side panel (see the opening photo). Then, after letting the stain dry thoroughly, we applied a coat of sanding sealer to the entire truck, steering wheel, and headlights. After the sanding sealer dried, we masked off everything except the undercarriage and bumper, and spray-painted them black. We also painted the steering wheel and steering dowel/front axle housing (both are unattached) black. (When you paint the steering dowel, mask off the spot where the steering wheel will be mounted. When painting the steering wheel, fill the ¾" hole with paper to keep paint out and to ensure good adhesion to the steering dowel later.)

Later, we masked off the undercarriage, the previously stained area on the side panels, and the bumper. Then, we spray-painted the body yellow and the headlights white. Finally, we fast-talked an artist friend into doing a little custom lettering.

3 After the paint has dried, reattach the axles to C and D using the mending plates. Place a flat washer onto the steering dowel. Insert the steering dowel through the chassis assembly (A–B), add another flat washer, and push the dowel on through the hole in the hood. Insert a cotter pin into the hole in the steering dowel, and flange its end to lock the steering dowel to the chassis.

4 Glue the headlights in place in the ¼" holes in the front of the grille. Turn the truck on its side, and glue the steering wheel onto the steering dowel (this keeps the steering wheel in place and prevents epoxy from dripping onto the body).

5 Twist a screw eye into the end of the boom. Tie a short length of nylon cord to the screw eye, and attach an "S" hook to the other end of the cord. Using a pliers, force the end of the "S" hook closed on the nylon cord.

BUYING GUIDE

● ***Epoxy kit.*** Kit includes 750 ml (just under a quart) of resin and hardener, gloves, measuring cups, stir sticks, and product information. $20.95 from Headland International, Inc., 2020-124th Ave. N.E., Suite C-102, Bellevue, WA 98005, or call 206/885-0622.

● ***⅜" plug cutter.*** Plugs are chamfered for easy inserting. Catalog no. M4310, $10.50. The Woodworkers Store, 21801 Industrial Boulevard, Rogers, MN 55374. Or call 612/428-2199 to order.

Produced by: Marlen Kemmet
Project Design: Kim Downing
Photographs: Bob Calmer; Jim Kascoutas

A GUIDE TO THE PRESERVATION OF
OLD HAND TOOLS
Complete with Particulars Regarding the Cleaning and Replacement of Sundry Tool Parts

Wherein We Offer Our Method for the Clarification of Linseed Oil as a Protective Finish

OTHER VALUABLE INSTRUCTION INCLUDED AS WELL

"They sure don't make tools like this anymore," you muse as you turn the old jack plane in your hands.

Thousands of planing passes have smoothed its wooden sole. Years of grime obscure the wood's once-satin finish. The tote bears the crinkles of old age, and rust clings to the metal. Decades ago the tool was a beautiful thing—can it be again?

The answer is "yes," if you keep in mind two preservation guidelines of antique tool collectors and dealers:

1. Make it reversible. Whatever you do to clean and repair a tool, it shouldn't be permanent.

2. Less is best. The less you do to a tool, the more it retains its value. Old tools should look old.

Whatever that tool happens to be—a plane, saw, ax, drill brace, or spokeshave—you want only to preserve its character and value.

WASH AWAY THE DIRT AND DUST OF TIME

Removing years of accumulated grime can be a chore, but it's the only way to get a good look at the tool. Then, you'll see what else needs to be done in its reconditioning.

Give the tool a general cleaning with a cloth dampened with mild liquid dishwashing soap and warm water. Prevent scratching or marring an aged surface by using only a soft-bristled toothbrush to clean out cracks and crevices. Go easy on the scrubbing.

Once you've washed the tool, "rinse" it with a cloth moistened with clean water. Let the tool dry thoroughly before proceeding (you can speed up the drying process by wiping with a cloth dampened with denatured alcohol).

REMOVE AND CLEAN METAL PARTS, IF YOU CAN

Don't even try to remove metal parts from your tool if it looks like you may not be able to loosen them. It's better to clean them "as is" rather than risk damage.

Sometimes, a sprayed-on burst of penetrating oil, allowed to work on the metal overnight, will do wonders (as on the moving parts of a brace, for instance).

To clean rust from ferrous metal, rub the part vigorously with steel wool—the finer the steel wool the better. Don't use oil or any polishing lubricant.

Layers of rusty scale call for some light chipping with a dull chisel or dental picks. Be careful not to "dig" too deep and remove any of the underlying base metal. And fight the temptation to grind rust off with a wire wheel or sand with abrasives—you'll grind off too much.

Some metal parts may have a black or colored finish. On old tools that's called *Japanning,* so-named for the Japanese technique of building up layers of lacquer. Leave it alone. Only a few master restorers have been able to duplicate the process, and any cover-up or touch-up you try won't match.

Don't be over-zealous, either, in scrubbing or cleaning parts made of brass, bronze, or silver. They add to the value of the tool and can be easily damaged. Usually, a hand-rubbing of these parts with an appropriate polish will renew their luster.

Lift off paint splatters and spots with the tip of a dull knife. Stubborn ones might require a dab with a cotton swab saturated in paint remover. Let it soak in, then lift off. Should there be any built-up grease on your tool, paint remover also acts as a degreaser. But be stingy—excessive paint remover might leave permanent spots, especially on Japanning.

DON'T OVERWORK OLD WOOD

Wooden parts on old tools usually reflect years of use. At the same time, the wood has gained a character you don't want to lose. The warm, natural patina of levels, cabinet scrapers, saw handles, plane stocks and the like took time to develop. You don't want to remove it.

Print this article

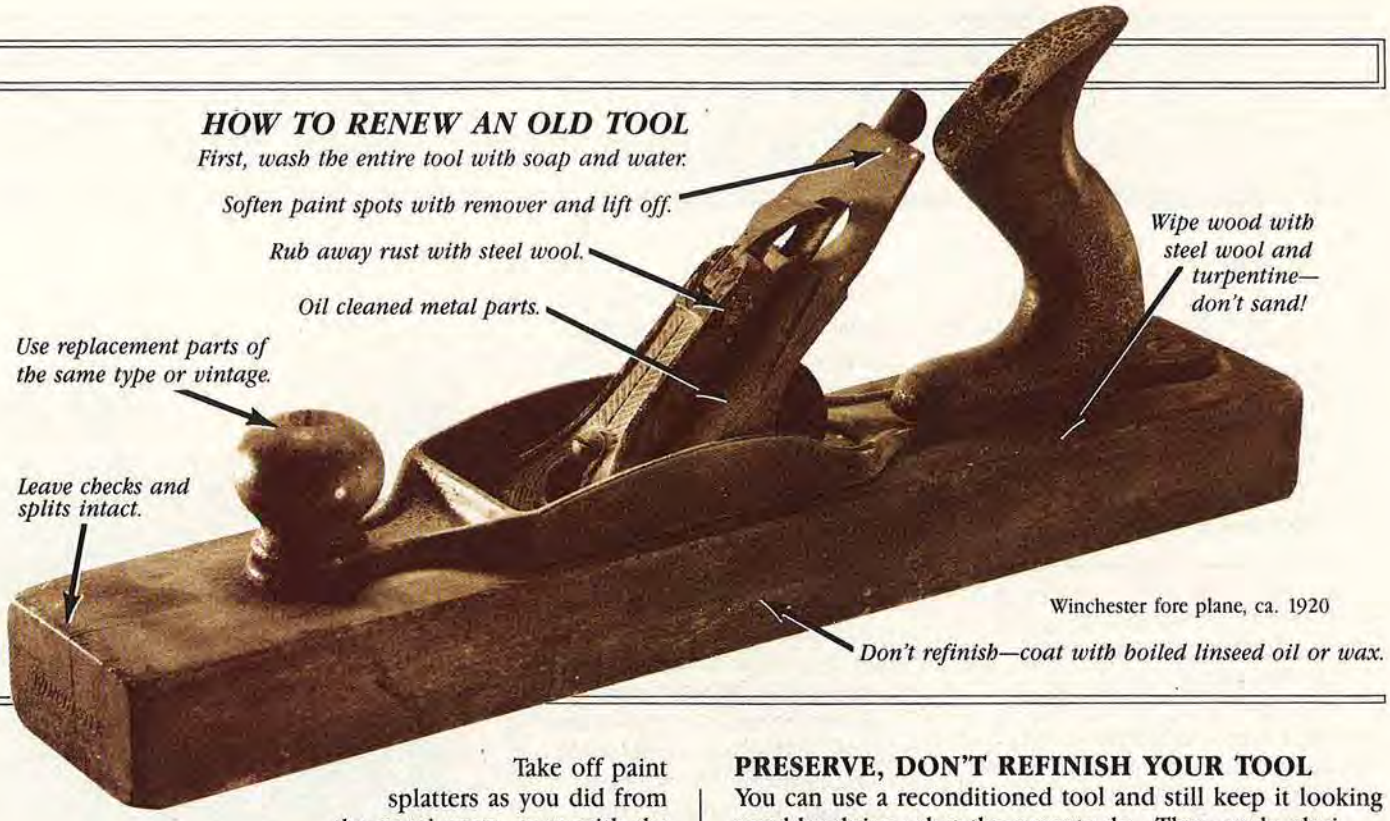
HOW TO RENEW AN OLD TOOL
First, wash the entire tool with soap and water.
Soften paint spots with remover and lift off.
Rub away rust with steel wool.
Oil cleaned metal parts.
Use replacement parts of the same type or vintage.
Leave checks and splits intact.
Wipe wood with steel wool and turpentine—don't sand!
Winchester fore plane, ca. 1920
Don't refinish—coat with boiled linseed oil or wax.

Take off paint splatters as you did from the metal parts, even with the aid of paint remover. Any resulting lighter-colored areas will be evened up in the cleaning.

Use a fine steel-wool pad moistened with mineral spirits or turpentine to restore wood. Never sand. And leave checks, splits, cracks, and other imperfections alone—they're valuable signs of age. On some tools, especially planes, you'll find a maker's mark or brand name impressed in the wood. Use a toothbrush gently to make it more visible, if necessary.

BE FUSSY ABOUT REPLACING PARTS

Beware! Old-tool reconditioners tend to make the most mistakes when it comes to repairing or replacing parts.

To preserve the tool's value, replace any screws, blades, handles, and other damaged components with parts from the same period. Where do you get them? Collectors advise scrounging up a "parts" tool of the same type and vintage at a flea market, auction, or tool swap. Of course, many antique tool dealers carry spare parts, but you'll pay a premium. You can also check with other tool collectors through the associations listed in the box. Newsletters produced by these groups always carry "wanted" or "for sale or trade" notices.

If and when you do replace parts, keep the originals in a bag tagged with the contents. Should you ever want to sell your tool, the buyer might want all original parts, no matter what condition they happen to be in.

Your tool could also require repair, such as gluing a broken handle. For such mends, use a water-soluble white glue, never an epoxy. Keep in mind that someone in the future may want to take it apart (epoxy is permanent).

PRESERVE, DON'T REFINISH YOUR TOOL

You can use a reconditioned tool and still keep it looking good by doing what the experts do. They apply clarified, boiled linseed oil to the wood parts in several coats, letting the oil dry in between (see p. 82). A final rubbing with a soft cloth produces a sheen. A paste wax containing carnuba also does the trick. Just rub it in, then buff, as with oil.

Never shine up wooden parts with a household polish intended for paneling or furniture. These products often contain silicone, which penetrates the grain and can't be removed or recoated with another finish. And polyurethane finishes aren't recommended because they tend to look artificial.

Metal parts require a coating of oil to prevent rust. Use a lightweight machine oil, such as sewing-machine oil, and apply it lightly. Don't use spray-on oils—they're too volatile and evaporate quickly.

For tools you'll only want to display, borrow a tip from museum curators. They use a special wax that seals the wood and metal parts to prevent deterioration. After application, the wax remains slightly tacky to the touch. You can order one brand, Renaissance Wax, through mail-order woodworking supply houses.

OLD-TOOL COLLECTORS' CLUBS

Want to collect, or simply need advice? These groups can help you out:

- Mid-West Tool Collectors Assoc., 3325 Culloden Way, Birmingham, AL 35243
- Southwest Tool Collectors Assoc., 27126 Glencreek, Huffman, TX 77336
- Mid-Atlantic Tool Collectors Assoc., 5406 Pinetop Circle, Raleigh, NC 27612

Continued on page 82

READERS, IT'S YOUR TURN! PROJECT

Print this article

Craftsmanship has endured—at least among woodworkers. From a trio of jewelry boxes to a baker's rack, this issue's featured projects show that some of the most traditional designs can also prove the most appealing.

SIMPLY SPALTED

Peter J. Stephano, 45
Des Moines, Iowa
Writer/Editor

WOOD readers know Pete as our Features Editor, who's frequently on the road ferreting out articles. We wanted to show you that Pete sometimes shows up in the workshop, too. Here's the pleasing result of a few hours' work one Saturday.

Pete came across some spalted maple in the woods on one of his trips, and, back in the shop, made it into these unique jewelry boxes. Each measures about 2″ tall and up to 3½″ in diameter. He cut them to their slightly pyramidal shape on the band saw by tilting the table about 10°. The marblelike pattern on the tops shows exactly what you'd see on the end-grain of a spalted log.

After slicing off the tops for lids, Pete hollowed out the bases to ¾″ deep with a Forstner boring bit in overlapping cuts. Then he fitted the tops with tiny pegs, which he inserted into thicker sections of the boxes' walls to act as pivoting hinges. The tops swing aside to reveal their contents.

"If you control the depth of the bits, the bottoms will be smooth," Pete says. "On the inside walls, however, I had to sand with a drum sander."

To highlight the spalted grain patterns, Pete sprayed the boxes with three coats of Deft, using steel wool between coats. A final coat of Briwax brought up the shine. "The grain pattern is so unusual, everyone asks what wood I used," Pete says. "Best of all, it was free."

A CEDAR CHEST YOU'LL NEVER SEE IN A STORE

Barry Champagne, 38
Baton Rouge, La.
Hospital building manager

Baton Rouge furniture stores can't count on Barry—he furnishes his home with his own work. This 49¾×24×18¾″ cedar-lined chest is the latest of his creations.

Barry shopped, peeked, and poked to find wood that satisfied him as to grain and color. He finally chose ¾″ Appalachian red oak for the top, decorative door fronts, and drawers. He made the front, sides, and back from ½″ oak plywood, and used ⅜″ lauan plywood for the bottom.

We didn't receive a photo of the inside, but Barry tells us he beveled the edges of ⅛″ aromatic red cedar. Then, using contact cement, he applied it in a parquet pattern.

Never content with off-the-shelf stain colors, this craftsman mixed four different tints until he got just the right tone. Barry topped his project with three coats of polyurethane. Nice job, Barry—want to go into production?

SHOWCASE

TURNED 'TO A TURN'

Glenn Straub, 42
Bowmansville, Pa.
Artist and craftsman

You might say that Glenn turns his segmented vases "to a turn." And once you know his background, there's no doubt about it. Precision, to within thousandths of an inch, sets the standard he brought to woodworking from years of toolmaking.

Glenn's penchant for accuracy makes all the difference in the tight fit of the "windows" of this vase. He made these segments of bird's-eye maple and framed them in rosewood for high contrast. He also used rosewood in the neck to give some zip to the plain maple featured in the rest of his 6½"-high and 4"-diameter piece.

For uniform grain all around, Glenn used barrel (stave) construction, and had to cut the sides of each section to exactly 22½°. He glued up all the pieces with epoxy, holding them in place with a nylon cord until the glue dried. Then, he turned the segmented vessel to shape on a lathe.

For a super-smooth, super-lustrous finish, Glenn's sanding progressed to 400-grit wet/dry paper. He followed that with polyurethane and a coat of carnuba wax. It's clear that Glen isn't any slouch at finishing, either!

DOWEL-JOINED PIE RACK

Edward M. Zadjura, 35
Bowie, Md.
Federal auditor

As a Christmas present for his wife, Ed built this solid red oak reproduction of an old-time baker's rack to replace an aged metal one that had served the family for years. "It was my first furniture-type project," Ed informs us. And it's all joined with dowels!

Ed used a $29.95 doweling jig, which he found he could count on to self-center perfectly, to make precise holes in his boards for edge-joining. He dowel-joined all his boards for width first—in 6′ lengths. Then, he crosscut the wide stock for the rack's lower back, sides, and shelves. Again, he used all dowel joints to fit the subassemblies together. When you have a good thing going, you might as well stick with it.

The completed rack stands 72″ high by 25″ wide and 15″ deep. Since his wife uses it to display her cookbooks as well as antique kitchen tools and jars, Ed gauged the height of the shelves to store them without cramming.

To hold up in a high-traffic kitchen, Ed finished his project in polyurethane satin over a pine stain. While it looks new and shiny now, he hopes it gains more character over the years from the inevitable bumps and bangs. "It should grow better with age. And with our daughter and her dog constantly in the traffic pattern, aging could occur quickly," Ed notes wryly.

To submit your projects . . .

Send a 35-mm color slide *only* (no prints) with the project as the focal point and a simple background—no people. Include a capsule description—materials, joinery, finish, and dimensions, for example. *WOOD* will pay $25 for published projects. Slides cannot be returned unless you enclose a self-addressed, stamped envelope.

Project Showcase
Better Homes and Gardens®
***WOOD* Magazine**
Locust at 17th
Des Moines, IA 50336

POWER MITER

At long last, you can buy a saw that does exactly what you want it to do—make picture-perfect cuts with the flip of a switch.

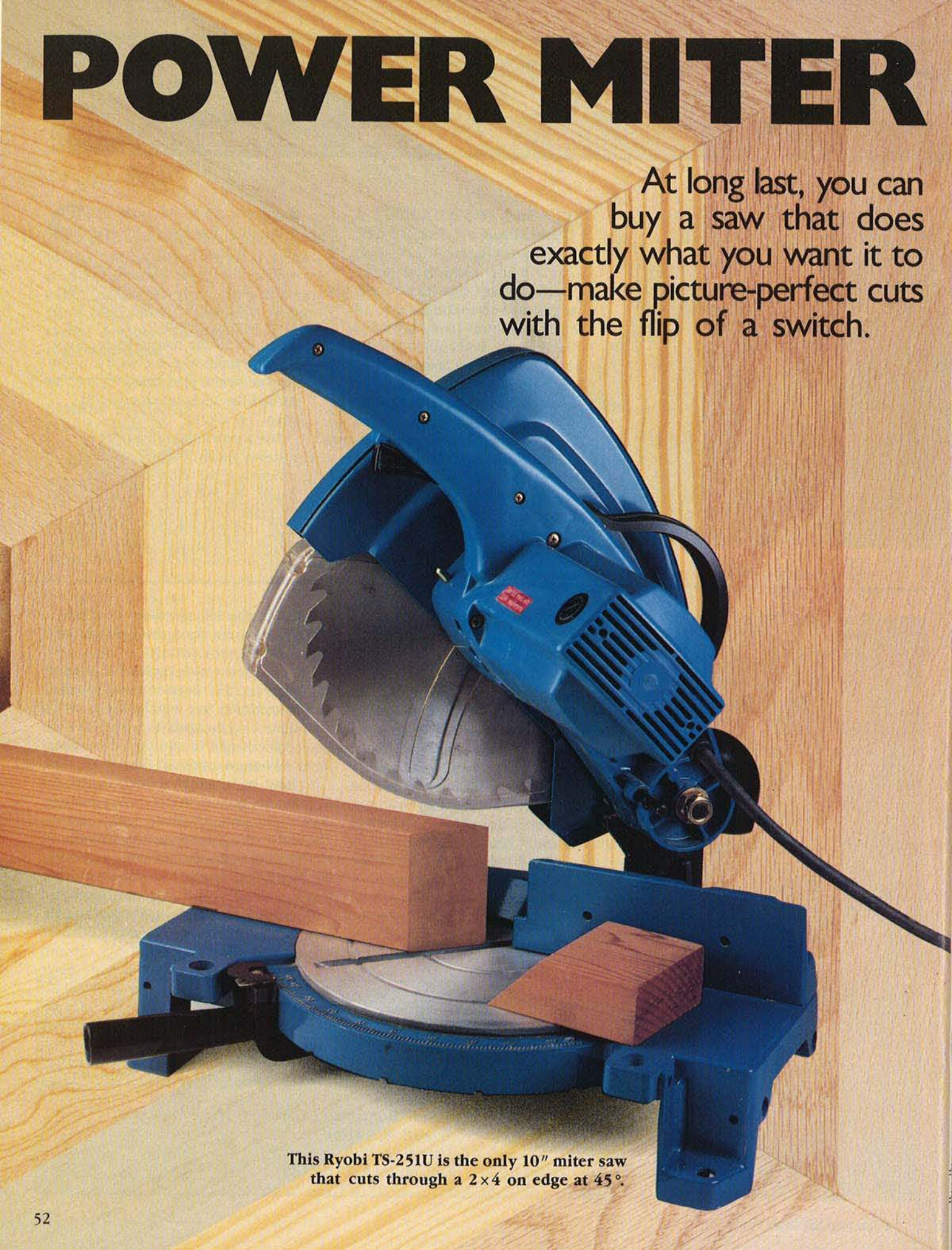

This Ryobi TS-251U is the only 10″ miter saw that cuts through a 2×4 on edge at 45°.

SAWS SUPER ACCURATE CUTS—AT ANY ANGLE

We aren't ready to say that no shop should be without one of these specialized cutting tools. But if you do much work with small trim pieces and moldings, you really ought to investigate a power miter saw. This compact machine performs its single task with precision and ease.

For this report, we asked manufacturers to let us try for ourselves power miter saws with interesting design features and options. Here's what we learned—a guide to help you in making the best decision about a power miter saw for your shop.

Print this article

HAND MITER BOXES VS. POWER UNITS

Suggested retail prices of 10″ and under power miter saws start at about $145 and top out at $400. We think that price range makes them a good buy for any woodworker who does a lot of mitering—especially when you consider that discounts of 30–40 percent are not uncommon.

Sure, a fine hand miter box can cut precise angles with fairly smooth, clean results. But to get the micro-fine angle adjustments that ensure a great fit, you need a guillotine-style mitering shear. The costs: from $250 to $400 for a really accurate hand miter box, and another $250 for the hand shear.

There are other alternatives to power miter saws as well. You can crosscut angles and bevels on a table saw, or make the same cuts even faster on a radial-arm saw. But, especially if you don't have the room or the budget for a radial arm, you can't beat the power miter saw for accuracy and safe operation.

GUARDS: SAFETY WITHOUT OBSTRUCTING VISIBILITY

A guard on any tool has a difficult job. It must help keep the operator from accidentally getting in the path of the moving blade, yet not obstruct the line of view.

Hitachi and Ryobi approach the dilemma with a rear-hinged plastic blade guard that raises inside the metal top guard. It isn't safe to raise such a guard by hand to line up your blade and cut. However, the rear-hinge system swings the front of the guard up and out of the way before the blade hits the wood, making it easier to line up a cut.

Makita improved its guard system dramatically in the new LS1000. Although the old guard afforded a high degree of safety, it made seeing the blade to line up a cut almost impossible. The new guard is a total reversal of the old two-piece, front-hinged version. The spring-loaded, center-mounted hinge system on the outside of the metal guard gives this saw a more compact look and feel. A thumb-hold molded into the top allows you to lift the guard with one hand, freeing the other hand to move the workpiece to line up the cut. Safety isn't compromised because you can't have your hand on the switch or the safety lock while you raise the guard. When you're ready to cut, simply drop the guard and saw away.

A final variation worth noting is the Black & Decker 9425. It features an automatic, all-metal wraparound guard system. As you pull the saw down, the guard swings out, up, and around the blade inside the upper guard housing. With the saw fully raised, a safety catch holds it in place and the guard completely surrounds the edge of the blade until you push the release to lower the saw for a cut. This system gives you completely open viewing of the blade for cutting and still shields you from the blade when not cutting.

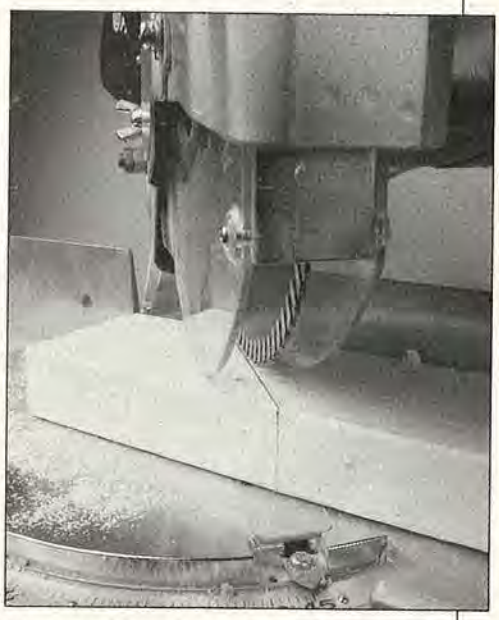

The rear-hinged guard on the Hitachi C 10FA lifts out of the line of vision before the blade makes contact.

Makita's new guard system lets you safely raise the guard without accidentally turning on the machine.

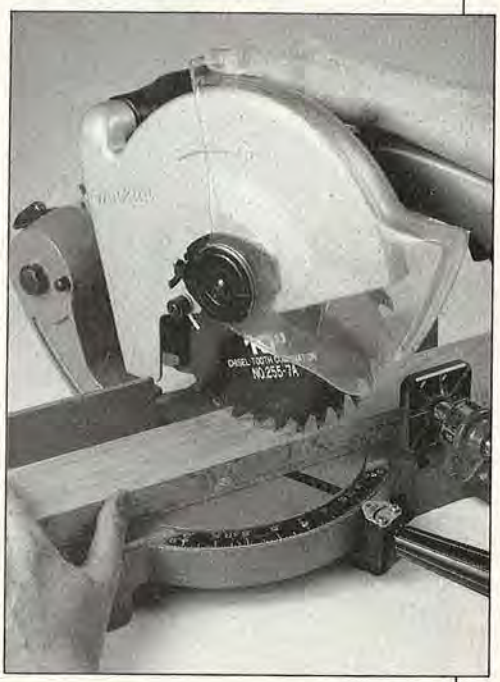

Continued

POWER MITER SAWS

CUT-THROUGH TABLE DESIGNS

Led by the original Rockwell/Delta (now Delta) 34-010, the first power miter saws featured a particleboard, cut-through table. The table gradually deteriorated through use, requiring periodic replacement.

Then, about a decade ago, Makita revolutionized power miter saw design with its all-metal rotating table. The single, preformed slot guaranteed consistent accuracy with a permanent table.

Several manufacturers have even gone one step farther with a cut-through plastic insert in the blade slot. The Makita LS1000, the Hitachi C 10FA, the new Delta 34-080, and the Black & Decker models all utilize this design to assure that the blade will fit snugly through the table slot. This eliminates much of the potential for bottom chip-out, the one advantage of the particleboard table design (when you repeatedly make the same angle of cut—not various angles).

Delta introduced the 34-010 in 1967. It is the only saw that still has a cut-through particleboard table.

Note the cut-through plastic slot of this Hitachi C 10 FA. This design feature ensures you a tight blade fit.

BRAKES, LOCKS, AND HANDLES

The surest motor hold-down for storage or transport is the reliable pushpin, shown on this Delta 34-010.

Several saws offer either a **manual** or an **electric brake.** The manual versions work by pressing a plunger against the blade (Black & Decker) or against the drive mechanism (Delta and Sears). Electric models reverse the power field briefly after you take your finger off the trigger and force the motor to stop quickly. Although it's more expensive, we prefer the electric system—it causes less wear on parts.

Arm hold-downs come in three styles. Delta, Black & Decker, and Ryobi use a pushpin that locks the joint between the upper and lower support arms. Makita locks the same joint, but uses a flip lever against a cast-in stop. While Hitachi redesigned its 15″ saw to use a pushpin, the C 10FA 10″ saw still has a cumbersome chain that bolts to the base and attaches to a hook on the motor housing. To us, this is one of the few things we *don't* like about this otherwise high-quality machine.

When it comes to **arbor-shaft locks,** American firms should take note of their Japanese counterparts. You can change blades on Hitachi, Ryobi, or Makita models with just a wrench for the hub nut and your thumb to push the locking button. The saws without this feature require an easily lost wrench and a large hex key, just like a radial-arm saw.

The biggest difference between Japanese and American saws lies in the **handle design.** Except for the Black & Decker 9425, American saws have the familiar D-handle found on hand circular saws. While this design is comfortable for gripping, it's best suited to pushing forward, not pulling down (as you must do with a power-miter saw).

Japanese handles, on the other hand, resemble the straight handles of Dozuki saws. Instead of pulling down with your fingers, this design lets you use your wrist. The result: better control and less fatigue.

You can fit wide crowns on cabinets with this B & D 9425.

This unique compound-miter saw from Sears combines a radial arm and turntable design.

COMPOUND-MITER SAWS: AIMING AT THE CONSUMER

The three consumer compound miter saws on the market offer a useful variation on standard power miter saw design.

At $145, the Black & Decker 9425 is the first miter saw designed specifically for the low-end consumer market. (Note: The Sears 23355 is basically the same saw.) Like most power-miter saws, the 9425 uses chop-saw (i.e., plunge-cut) action to achieve beveled angles. It's a great idea, but the low price means minimal aluminum castings and a plastic base and fence. The result: a shakier cut than we like.

The Sears 2374 radial-miter saw is harder to categorize. Were it not for its small size, we'd have a hard time classifying the 2374 as a true miter saw. While it does have the single support arm system and turntable of the chop-style saws, pull-through cutting action makes it more like a full-sized radial arm.

The radial-arm design makes this saw unique. Inside the massive top cover are two chromed steel parallel rods. The saw head slides on nylon sleeves over these rods. For compound cutting, the entire saw support arm and column pivot left.

Both the Black & Decker and Sears compound-miter saws have many fine features. We like the comfortable feel of the horizontal handle and portability (at 17 lbs.) of the Black & Decker. The lightweight base and turntable and the finger-control click stops are pluses of the Sears radial-arm model.

Unfortunately, these saws have much more play in the pivot systems than we like to see. It's a concession made, we assume, to maintain a low consumer price.

THE STUFF BASES AND TABLES ARE MADE OF

Here, the object is to keep the tool lightweight without sacrificing size. Tables and bases on most power miter saws are either cast iron or cast aluminum. One consumer saw, the Black & Decker 9425, has a plastic base, and the largest 10″ saw, the Hitachi C 10FA, has a 13″ cast nickel-steel turntable. The latter is 3″ to 4″ larger than other turntables, and the base is almost 2″ longer than several other models. The increased size gives the C 10FA a slight advantage in terms of keeping the workpiece stable. Yet, its cast aluminum holds weight down to just 44 lbs.

Makita's new LS1000 features a cast-iron base, table, and lower-arm support. Even though Makita's old 2400BW had a cast-aluminum turntable, the new version—at 40 lbs.—is 15 lbs. lighter.

Perhaps the most interesting base system is that of the brand-new Delta 34-080 with its extension-table capability. (See photo and description, p. 57.)

BLADES: GO WITH CARBIDE

Power miter saws can cut extremely accurate angles, but without the right blade you might as well be using a chainsaw. The blades that come with most of these saws have simple chisel-tooth tips that hack rather than shear. Our advice is to toss the factory blade and replace it with a carbide blade of 60 or more teeth, or a high-quality steel hollow-ground blade. With the price of sharpening going up and that of carbide coming down, we recommend the latter approach.

Several carbide blades are suitable for power miter saws. One that we consider outstanding is the Freud LU85M. Freud engineered this blade for one purpose only: smooth-as-glass, almost splinter-free crosscutting in miter and radial-arm saws. (This blade is not intended to rip.)

The 80 teeth are steeply alternate-beveled carbide, brazed to a Teflon-coated body. Although the teeth aren't flush in configuration, they leave only .007″ clearance between the edge of the cut and the blade body. This makes the LU85M cut like a hollow-ground blade, leaving a highly polished surface.

Freud LU85M carbide blade

One caution about the LU85M: The blade comes with sharpening instructions that must be followed *exactly*. Take the instructions with you to your sharpening service when it's time to touch up the tips. And make sure the sharpener uses diamond stones at least as fine as 320 grit. The LU85M is priced at $110 for the 10″ blade and also comes in 8″, 9″, 12″, and 14″ sizes.

Continued

POWER MITER SAWS

COMPARING POWER AND BLADE SIZE

In many tools, power delivered by the motor and drive train help you decide which model is right for you. Miter saws are an exception. Each of the saws available has enough power to handle the size of cut they make. Commercial 10″ and larger saws range from the 10-amp motor of the Black & Decker 1703 to the 15-amp Hitachis. Lower-powered saws also have smaller-diameter blades that require less power to do the job.

Actually, blade size is more of a factor when you are purchasing a miter saw. Obviously, a bigger blade means more capacity. Check the chart on p. 57 and you'll find that blades for chop-style miter saws (which includes everything but the Sears 7½″ 2374 radial arm) range from the 8¼″ consumer models to the king-sized Hitachi C 15FA at 15″.

The standard blade is 10″, which we think handles just about anything a home woodworker would want to tackle with one of these saws. However, if you have a 9″ table saw, you might want the advantage of being able to interchange blades with the 9″ Delta or Black & Decker model.

Hitachi at 15″ and Ryobi and Makita (both 14″) are the only saws larger than 10″. Essentially these saws are identical to 10″ versions, but are beefed up to accommodate larger blades. Their advantage lies in cutting capacities of almost 2″ more width and height than their smaller cousins. Unfortunately for the checkbook, their prices are substantially higher as well.

CAPACITY: HOW MUCH CAN A SAW *REALLY* HANDLE?

With the right blade, a miter saw can cut wood (both solid and veneers), dimension lumber, and moldings. It also can handle brass, copper, aluminum, and plastics. The width and height of these materials, though, depends on several factors.

If you look at the chart on page 57, you'll find the capacity of each saw listed as "height × width." These dimensions represent the maximum-sized block of material that the saw can cut. But there's more to it than that. For example, the Ryobi TS-251U has a listed capacity of 3⅛×3⅛″ at 45°. Yet, the saw will cut completely through a height of 3⅝″—if the piece is only 1½″ thick. (This makes the TS-251U the only 10″ saw that will cut a 2×4 on edge in one stroke.)

Other saws also have quirks when it comes to capacity. The Delta 34-010 will miter the very end of a board 1″ wide and 3¾″ tall—but only if the rest of the piece hangs off to the left. On some saws, mounting a ½″ or ¾″ auxiliary fence permits you to cut through a 2×4.

While power miter saws have limited capacity, remember what they're used for. Almost any molding and other fitted pieces in your projects are well within their range.

SCREW CLAMPS AND SUCH: OPTIONS TO CONSIDER

• **Screw clamps,** available on several saws, were a nice but awkward idea that just didn't work well when you tried to manage some unwieldy piece on the saw. Makita has solved the problem with a handy quick-release screw clamp. The device works like a fast-release bench vise. By turning the screw a quarter-turn clockwise or counterclockwise, you engage and release the threads. The clamp slides in and out when it's loose, and tightens down with a twist of the wrist.

• **Dustbags** on most models clip or slide on the dust-exhaust chute, aiming straight back. When you want to mount the saw up against a wall, you either have to remove the bag or bend the wire brace. The exception is Makita, which cleverly tucked its dustbag behind the motor. Despite their potential awkwardness, we think dustbags are worth it.

Makita miter saws feature this handy-to-use quick-release vise.

• **Short-bed extensions** are a feature of Hitachi and Ryobi saws. These U-bars extend the support off the end of the table by 6″ either way. The extra support doesn't amount to all that much, but it can come in handy in some instances.

CUTTING: TAKE IT EASY AND AVOID CHIPPING

It's easy to make the mistake of cutting too fast with a chop-style miter saw. The simple pull-down, plunge-cutting action lets you zip through your work, especially smaller pieces such as moldings. However, this results in chipping at the back and bottom of the workpiece at best and a blow-up with splinters flying at worst. Ease up and cut in one steady motion for better results and safer operation.

When it comes to avoiding chipping, we found one fence design to be outstanding. All power miter saws except the Makita LS1000 have a fairly wide gap between fence halves that allow the blade to move. Makita added plastic plates that move as the table rotates to close the opening to less than ⅜″. It's a real plus when you cut very small or short pieces that might be torn to splinters or ripped from your hand.

COMPARING POWER MITER SAWS

Manufacturer	Model no.	Blade size (in.)	Weight (lbs.)	Capacity* H×W 90°	Capacity* H×W 45°	Safety switch lock	Motor/drive assembly Amps	Bearings	Drive	No-load speed (rpm)	Brake	Spindle lock	Base frame	Turntable	Support arm	Base Blade slot	Dust bag	Vise assembly	Options Extension supports	Suggested price
Black & Decker	1703	10	39	3¼ × 4⅜	3¼ × 3¾		10	B	G	5,300	M		A	A	A	P	—	—	—	$260.00
Black & Decker	7715	9	37	2 15/16 × 4	2 15/16 × 3½		9	B & S	G	5,300	—		A	A	A	P	—	—	—	234.95
Black & Decker	9425	8¼	17.5	2¼ × 5¼	2¼ × 3¾		8	B & R	G	3,600	—		P	A	A	O	—	—	—	144.99
Delta	34-010	9	34	2½ × 4	2½ × 3⅝		10.5	B	B	5,000	M		A	C	A	C	—	—	—	231.00
Delta	34-080	10	55	3⅜ × 4	4 × 3R 3⅛ × 1L		14	B	B	5,000	E		I	A	I	P	—	—	—	300.00
Hitachi	C 10FB	10	48	3⅛ × 4 5/16	3⅛ × 3½	•	12	B	G	4,100	E	•	I	I	I	O	A	A	A	349.00
Hitachi	C 10FA	10	44	3⅛ × 4 5/16	3⅛ × 3½	•	15	B	G	4,500	E	•	A	A	A	P	S	S	S	419.00
Hitachi	C 15FA	15	55	4¾ × 6⅜	4¾ × 4¾	•	15	B	G	3,400	E	•	A	A	A	P	S	S	S	599.00
Makita	LS1000	10	40	2⅞ × 4¾	2⅞ × 3½	•	12	B	G	4,100	E	•	I	I	I	P	S	S	—	348.00
Makita	(A revised version of the LS1400 14″ miter saw will be available in late summer, 1986. No specs available at this writing.)																			
Ryobi	TS-251U	10	33.5	3⅛ × 4¾	3⅛ × 3⅛		12.5	B	G	5,000	E	•	A	A	I	O	A	A	A	329.00
Ryobi	TS-380	14	50.6	4 13/16 × 6 3/16	4 13/16 × 4⅜		14	B	G	3,400	E	•	A	A	A	P	A	A	A	599.00
Sears	2374	7½	65	2½ × 8¾	2½ × 6 3/16		10.5	—	G	5,500	M		A	A	A	O	—	—	—	269.99
Sears	23355	8¼	20	2¼ × 5¼	2¼ × 3¾		8	B & R	G	3,600	—		P	A	A	O	—	—	—	144.99

Bearings: (B)all (R)oller (S)leeve
Drive: (G)ear (B)elt
Brake: (E)lectric (M)echanical

Base: (P)lastic
Cast (I)ron
Cast (A)luminum
(N)ickel-steel

Blade slot: (O)pen
(P)lastic cut-through insert
(C)ut-through particleboard table

Options: (S)tandard
(A)ccessory

Arbor size is ⅝″ on all saws except: Hitachi C 10FA and C 15FA (⅝″ *or* 1″ arbor) and Ryobi TS-380 (1″).

*See section on capacity on facing page for more details.

THE NEW SAW ON THE BLOCK

We hate to talk about a tool that's not available to us to try out. However, the Delta 34-080 motorized miter box sounds too good to ignore.

At the time of this writing, the saw still is a month away from being in production, but it should be available in retail outlets by the time this issue of *WOOD* reaches you.

The 34-080 has a solid ⅝″ arbor shaft that runs completely under the motor. By separating the two bearings with the length of the motor, the blade arbor operates more like a table-saw arbor assembly. This feature should increase the stability and lengthen the life of the arbor.

Another point of difference is the belt-drive system. All miter saws except the two Deltas use an all-gear drive. Delta opted for a short, toothed timing belt. In the 34-010 you had to remove the blade, guard, and other parts to get at the belt. The new system mounts the belt opposite the blade. All you have to do to replace it is remove four screws and the motor and cover.

The most interesting feature of the 34-080 is the base system. The cast-aluminum saw housing, support arm, and 12″ turntable (with cut-through plastic insert) mount in a most ingenious cast-iron base. The casting is formed so that you can drop it over two 2×4's and, with standard-sized lumber, make your own extension tables of any length.

If this saw delivers on its promises, you really should take a look.

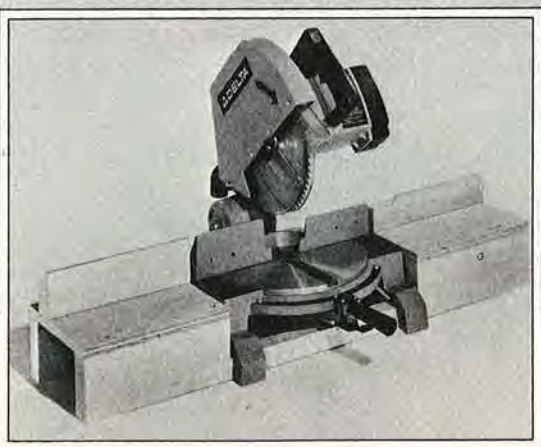

The new Delta 34-080 with its unique extension-table system.

Photo courtesy Delta International Machinery Corp.

Print this article

How they turn logs into lumber . . .

DOWN AT THE

These days, few woodworkers have the know-how, the equipment, the time, or the inclination to turn hardwood logs into stable stock that's ready for woodworking. But that doesn't stop most of us from occasionally wondering just how it's done.

Last winter, Features Editor Peter Stephano headed north to find out for himself—and us, too—exactly what happens in a high-volume hardwood sawmill. Here's what he learned at the Brunkow Hardwood Corporation sawmill in Bay City, Wisconsin—a mill that produces more than 5 million board feet of red oak, ash, walnut, cherry, and other graded, cabinet-quality lumber each year.

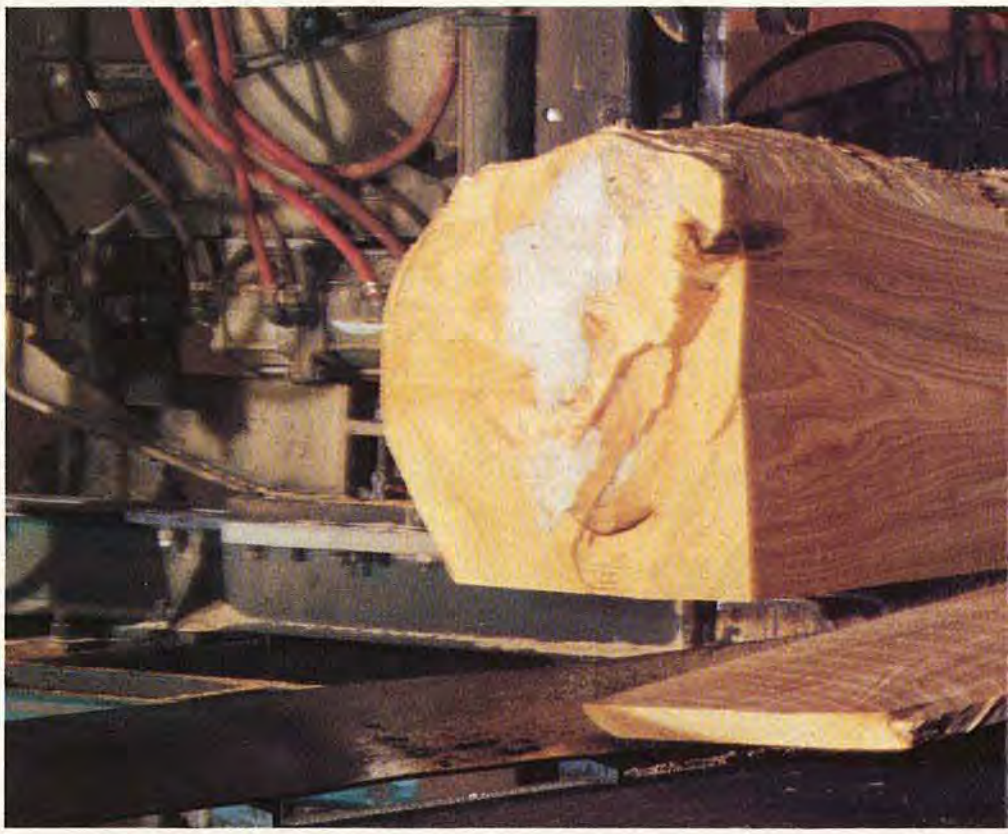

Wherever hardwood grows, you'll see sawmills. Wisconsin alone has more than 500! Some mills are small, two-man operations. Even smaller mobile mills travel to the logging operation or woodlot for on-site sawing. These smaller mills, however, can't produce in quantity the high-quality, graded hardwood lumber demanded by the furniture and cabinet industries—and by you, the home woodworker. Instead, they focus on railroad cross ties, pallets, barrel staves, box boards, posts, lath, and common lumber.

There's a big difference between "plain-sawing" logs for such common lumber and wood products and "grade-sawing" logs for boards graded to National Hardwood Lumber Association (NHLA) standards (see box on grading, p. 61). The sawmills set up to do it, like Brunkow's, are referred to in the hardwood industry as *grade mills.*

An ordinary mill runs a log repeatedly through its saw from one side to the other, the way you'd slice a potato lengthwise for French fries. The boards come off just as they were in the log—knots in the middle and all. That's plain-sawing at its simplest. Grade-sawing adds an important step: The logs are visually scanned, then rotated before they go to the blade in order to arrange defects on the boards' edges, where they can later be trimmed off, as shown in the photo, *above.* This takes skill, specialized equipment, and an investment in the hundreds of thousands of dollars.

That's why, for a grade mill to make money, the workers function as a team to keep the process going in high gear. There's little wasted wood. From bark to sawdust, *all* the log contributes to gross sales.

THE FOREST: WHERE QUALITY BOARDS BEGIN

Sawmills consider the forests surrounding them as their standing inventory because it's impractical to haul logs long distances. Brunkow's mill—set amid the rolling hardwood forests bordering the Mississippi River—draws on timber from state forests and private lands. When prime hardwood comes up for bid by the state, Brunkow's is there. Or, Brunkow log buyers appraise private timber and make an offer (see "Timber Cruising," *WOOD,* June 1986, pp. 50–53).

Sawmill manager Pam Herbst, 31, oversees the mill operation. A trained forester, she can spot quality boards-to-be in standing timber as well as in the mill. Pam knows that if the trees marked for cutting aren't properly felled, potentially high-grade lumber will be lost. "If the

Continued on page 60

OL' SAWMILL

Top. **In less than a minute, the huge, swirling sawblade slices up a red oak log into 1⅛" thick lumber. If the blade broke loose, it would travel at 110 mph!**

Above. **Three logs at a time, the hauler loads up his truck for the sawmill. To get a well-balanced load to the stakes, his first layer must be five logs across.**

LOGGERS' LINGO

Every industry has its own vocabulary—words for things, jobs, and actions that seem "just right." In logging and lumbering the terms are particularly colorful.

Buck: To cut a fallen tree into manageable lengths.

Bunk bed: The bottom-most layer of logs on a logging truck.

Cant: The rectangular, center portion of a log left after sawing. May be sold for railroad ties.

Choker: A cable or wire rope looped around a log or logs to drag them out of the woods.

Cut: The logging operation where trees are felled. A *cutter* is a chain saw operator.

Hog: A machine used to grind scrapwood from the sawmill into chips for other uses, such as particleboard.

Hot-logging: To haul fresh-cut logs directly to the sawmill for immediate use.

Jacketboard: One of the first four outer slabs cut from a log at the sawmill. Sold as firewood or chipped into particles.

Knot bumper: A logger who cuts branches from the log.

Live rolls: Powered rollers used to move logs to the saw.

Scale: The measure of the volume of wood in a log, in board feet. Also the surface measure (SM) of a board in square feet.

Shake: A grain separation between growth rings; a split. Rated as a defect in hardwood-lumber grading.

Sidehill load: An uneven load of logs on a trailer with larger logs placed to one side.

Wane: Bark, or any nonusable defect except knots on the edge or end of a board.

cutter in the logging operation takes the tree down too low, for instance, we've wasted length," Pam says.

Downed trees then have to be topped and limbed with a chain saw. After that, it's up to the skidder operator to move the logs to the landing, a loading area by the road.

With a choker cable pulled tight around the butts, or ends, of the logs, the skidder drags them from the forest in threes and fours. In winter, the packed and frozen ground offers little resistance to the telephone-pole-like lengths. The powerful skidder, looking like a combination tractor/tank, has no trouble dragging its payload of 6 to 10 tons over the terrain.

At the landing, another chain saw-wielding cutter bucks, or saws, the long logs to lengths from 8′9″ to 9′. These sizes fit the mill's equipment, which was converted from a tie-sawing operation.

"The cutter has to think about long, clear lengths," Pam notes as she points to the freshly cut logs. "Saw cuts should be made through limb scars and other defects so they'll be at the ends of the logs."

Just as the cutter has to carefully divvy up the long logs into shorter ones, the hauler must carefully lay up his load onto his truck's trailer. His truck has a hydraulically operated, crane-like boom with teeth that resembles the jaws of a clam. With the "clam," the hauler can pick up three logs at a time—like so many matches—and swing them onto the trailer bed until he has a full load of about 35 logs.

DOWN THE DECK TO THE DEBARKER

At the mill, the forklift operator takes charge of the newly delivered logs. Manuevering his giant machine from inside its cab, the operator picks up seven or eight logs at a time. He either stacks them in the vast mill yard for future sawing or starts them on their way through the mill by dumping them directly onto the powered rollers of the elevated deck located just ahead of the noisy, chattering debarker.

In a minute or less, the debarker operator skins off a log's thick coat by mechanically rolling it against the machine's gnawing teeth, shown in photo, *right.*

Naked and marred from its mauling, each log passes from the debarker to the inbound deck. Where they once rode crosswise on the conveyor, the logs now stretch lengthwise down the roller in order to more easily enter the mill. While logs move to the saw carriage, their bark goes a different direction—up a chute for bagging as landscape bark.

As a log enters the building, mechanical kickers boot it off its headlong path and send it in a new direction—to either the saw on Line No. 1 or the one on Line No. 2. Bunching up now side to side and resembling ribs of corduroy, the logs await the sawyer's nudge of a button to move them forward one at a time onto the saw carriage.

HOW THE SAWYER MAKES GRADE

In the saw carriage, the journey of the raw material in-the-round halts momentarily. The sawyer scans the log for visible defects that will determine his vital first cut (see the illustration on the next page). Using the mechanical arms on the carriage to turn the log over and over in inspection, he decides on position and steel dogs lock it in place.

If the sawyer sets the log correctly the first time, he'll slice off the widest and clearest boards with the first few passes through the saw. Then, he'll turn the log three more times, repeating the cutting sequence.

The sawing happens in an instant. Once he visualizes his first cut, the sawyer sends the log to the 56″, carbide-toothed blade incredibly fast. Zzzinnggg. The first jacketboard falls free of the log. The carriage shoots back. Again. Again. Dogs turn the log for more slices. Down again. Zzzinnggg.

In less time than it takes to describe, the sawyer reduces the log to a pile of boards that each, in turn, move on down the line.

Top. **Acrid dust and chips fill the air as logs pass through the debarker. The sawyer can now see defects clearly. Bark chips get bagged for landscaping.**

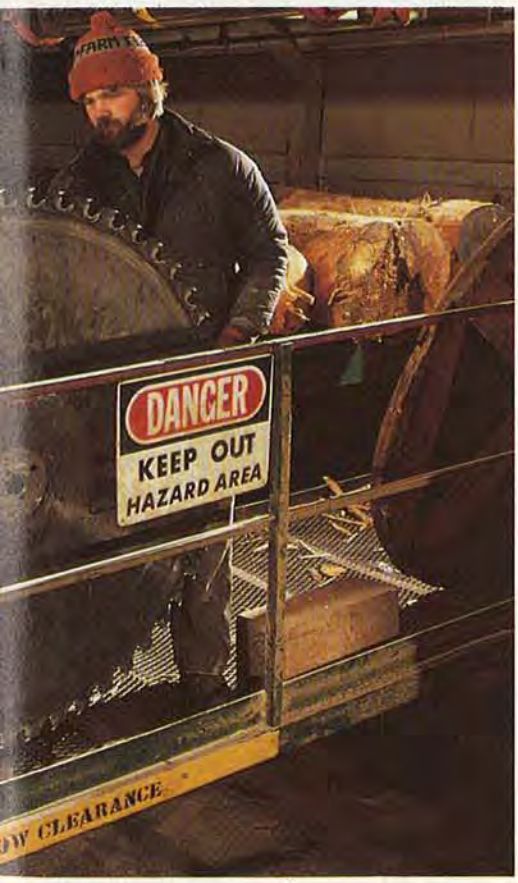

Above. **Replacing the 56″ blade requires two men. Tim Hohmann, left, the fix-it-all millwright, helps Brad Olsen, a sawyer, move the blade to Line No. 2.**

SAWING FOR GRADE

How to get the most out of a log

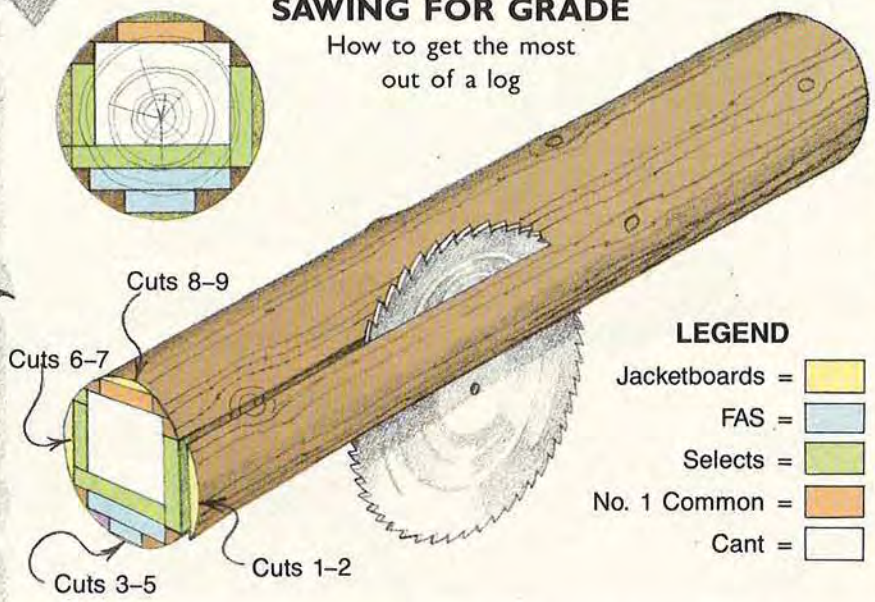

By "reading" the surface of a log before sawing, then turning it on the carriage before subsequent passes, the sawyer obtains the maximum yield of graded boards. The drawing, *above*, shows you how the sawyer might slice up a log into 1″ stock.

Cuts 1–2 remove a jacketboard and a Select board, then the log is turned for sawing cuts 3–5, 6–7, and 8–9 in order. Higher-graded boards come from the log's outer wood. Deeper into the log, the boards sawn have more knots. All lines on the drawing define the size of the boards when sawn and edged, and the color code designates grade.

After the boards come off, the rectangular-shaped *cant* of heartwood is sold to other mills for further sawing or is marketed as railroad ties.

WHAT GRADES MEAN TO YOU

Native hardwood lumber, such as that you buy from a retailer for use in your shop, meets different quality levels as specified in the grades formulated by the National Hardwood Lumber Association (NHLA). While you'll find hardwood in thicknesses from 5/8″ to 2″, the basis for grading is not thickness, but rather the number and size of defect-free portions, called *clear cuttings*, a board will yield. Here's what it takes for a board to meet grade:

FAS (First and Seconds). The best and most expensive grade. Used for large furniture projects requiring large, clear faces. Boards must be 6″ or wider, 8′ or longer. Yields 83⅓ percent clear stock on both sides.

Selects. Useful for furniture or projects where only one side will show because one side is graded FAS, the other No. 1 Common. Boards have to be 4″ or wider, 6′ or longer. Yields 83⅓ percent clear cuttings, but only on FAS side of board.

No. 1 Common. Price difference between this and higher grades significant enough to often make up for lower yield of clear stock. Boards must be 3″ or wider, 4′ or longer. Yields 66⅔ percent clear cuttings.

Continued

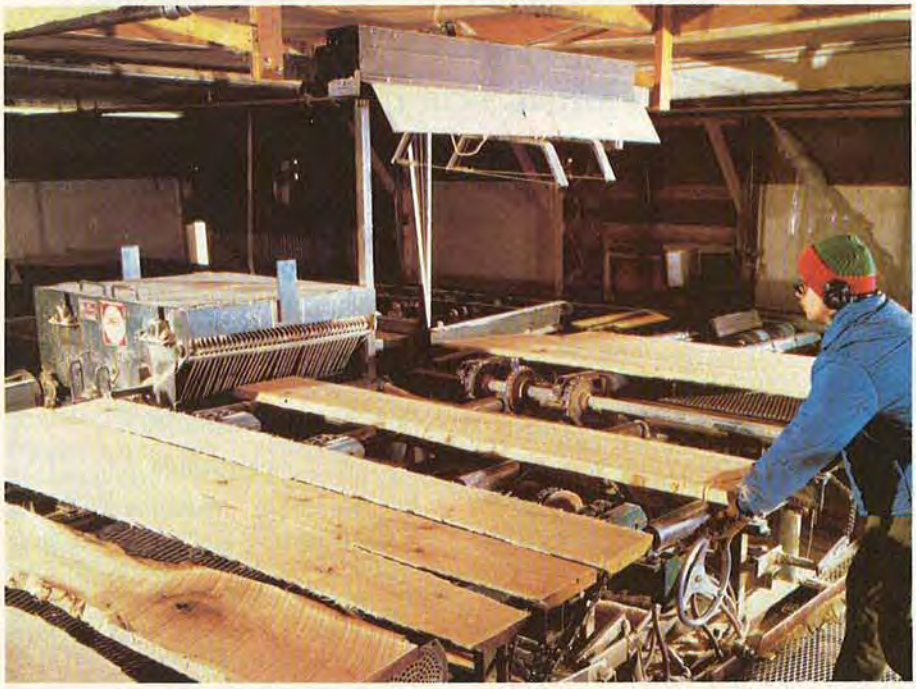

REMOVING DEFECTS: THE JOB OF THE EDGERMAN

Jacketboards and other trim from the saw go directly to the grinder for chipping into the raw material for particleboard. Boards for grading are channeled down a belted conveyor to the edgerman.

In slicing the log, the sawyer has made boards with most defects falling to the edges. Now, the edgerman decides how he will edge the boards. He either "rips for grade" or "rips for scale."

For instance: A board roughly 8" wide may have some knots, spots of bark, and other irregularities. In the industry, these imperfections are called *wane.* In edging, he can rip that board wide, leaving on much of the wane. That means there'll be more board feet, or scale, in that piece of lumber. However, the edgerman may see that by ripping off more wane, he'll get a clearer, but narrower, board that might grade as valuable FAS (see illustration, *below*).

The edgerman's decision is aided by a special overhead light. Two long rods mounted under a reflector, shown in photo, *above,* cast twin shadow lines on the board before him. With a variable control, the edgerman either widens or narrows the space between the lines to visualize his cuts. Once decided, he sets the distance between the rip saws by turning a wheel, feeds in the board, and never sees it again.

Above. **To remove wane from grade-sawn boards, Robert Miller, the edgerman, adjusts the width between his rip saws. Much of the red oak he's edging will be graded First and Seconds.**

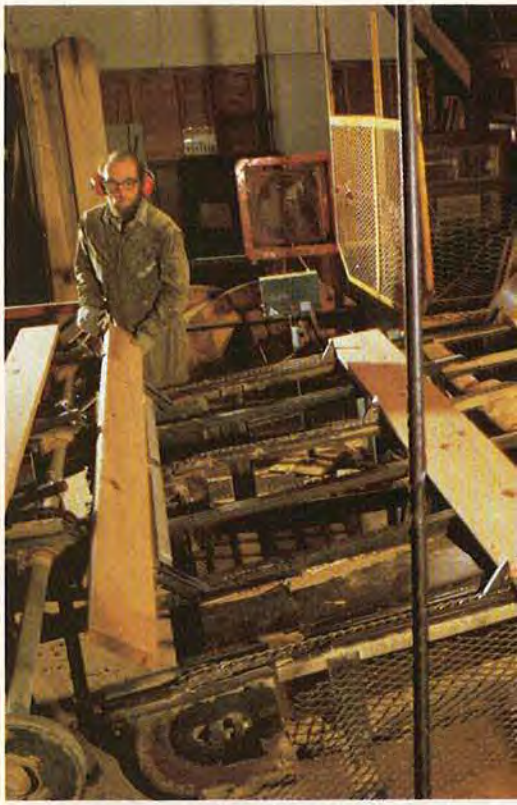

Above. **By slicing off any waste on the ends, trimmerman Jay Carlson upgrades boards. He cuts most of them to 8'6" to allow for checking during seasoning.**

Above. **Grading stick in hand, lumber grader Jerry Scott marks each newly sawn board for quality and surface measure.**

Right. **Mill manager Pam Herbst checks thickness. An extra ⅛" on a year's production would be like throwing away 66,000 board feet!**

A LITTLE LESS WANE, IF YOU PLEASE!

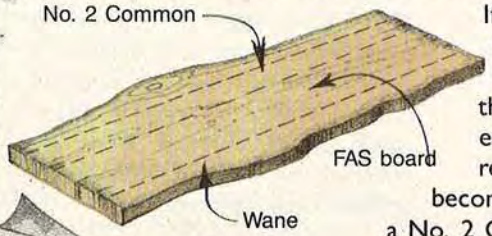

If this entire board was edged full width, it would be graded No. 1 Common. Ripped on the broken lines, however, the excess waste, or wane, is removed and the lower portion becomes an FAS board, the upper a No. 2 Common. Value is increased by as much as 25 percent.

DEALING WITH ENDS: THE TRIMMERMAN

Rough-sawn, edged boards are passed down to the trimmerman, who directs their cutoff to length. In the Brunkow mill, most of the hardwood lumber sawn ends up 8′6″ long. This length meets the minimum specifications for FAS stock (8′) and allows for some loss on the ends due to splitting and checking in seasoning.

When longer or shorter boards come by on the conveyor, the trimmerman deftly adjusts their position to meet his blades, shown in photo, *above*. The trimmerman, like the edgerman before him, also has the opportunity to raise the potential grade of the lumber passing by. But, he must decide in seconds.

Board ends have defects, too. If the trimmerman can eliminate them without losing scale, there's a chance that the now-clearer board will be graded higher.

From the double saws of the trimmerman, scrapwood follows the chute for particleboard. The edged and trimmed boards head for final judgment under the eyes, rule, and crayon of the grader.

QUALITY IN THE GRADER'S EYE

Hardwood grading takes years of practice. Keen eyesight and an understanding of the extensive NHLA grading rules are essential to do the job quickly. Hardwood graders demand top pay, and few mills can afford to keep them on the payroll unless they are kept busy all the time. Pam doesn't have a lumber grader at Bay City, but she can borrow one.

In Brunkow's other sawmill, 25 miles south at Nelson, Wisconsin, Jerry Scott is one of the two full-time lumber graders. When the mill has down-time, Jerry often travels to do Pam's grading on site, rather than waiting to grade the lumber when it's shipped down for kiln-drying.

Jerry's eyes have scanned many a board. In 12 years at the mill, he's worked nearly every job. Now, in a glance, he's able to pass judgement on hardwood.

Walking over the boards as they come off the line, Jerry carries a scaling stick in one hand and a long, thin pole fitted with a marking crayon in the other. The scene reminds you of cross-country skiing, but on a blanket of wood rather than snow. Jerry rarely looks up as he inspects the boards at his feet and assigns them a grade.

In just a few seconds' time, Jerry:

- measures length and width for a surface measurement (SM) in square feet with his scaling stick.
- pictures the number of 1×12″ clear cuttings on the board, then totals them.
- checks his findings against NHLA specifications, which he has committed to memory. Each hardwood grade (FAS, Selects, No. 1 Common, etc.) specifies the *minimum* number of clear cuttings boards must contain to meet that grade.
- assigns the board a grade with a code letter, marks the letter with the crayon directly on the board, and records the SM and grade in his tally sheet for totalling.

Sometimes, Jerry suspects he can raise the grade of a board if he has a look at its other face. He flips the board over with the hook on the end of his scaling stick. His hunch confirmed, he'll mark and tally it.

"I'll always try to up the grade," says Jerry, "even if that means more ripping or trimming to make it."

SEASONING: SUNSHINE AND STEAM

Insiders call it "mill bright"—freshly sawn lumber straight from the mill. It's also green, with a moisture content of 70 percent or more. Getting it down to the acceptable 9 percent takes two steps, and lots of time.

At Bay City, Pam directs the arrangement of the pallets containing the stickered, mill-bright wood on the hilltop so that prevailing winds whistle through the stacks, whisking away water. In time—about 90 days for red oak—the sun will draw its share of moisture, too, and turn the boards a shade darker.

Once air-dried down to 25 percent moisture content, the boards will be trucked to the kiln at Nelson.

Fired by sawdust, an abundant by-product of the mill, the furnace produces heat that fans circulate through, over, and under the wood in the 160,000-board-foot-capacity, two-section kiln. Temperatures gradually rise from 90° to 180° during the 8-day kiln-drying.

When the wood reaches 6 percent moisture, the drying process must be briefly reversed. "To condition the boards for sawing and working by the ultimate user, we introduce steam," says Pam. "This pushes moisture content back to 9 percent."

Following a pass through the 36″ abrasive planer, the graded hardwood reaches shipment stage, ready for delivery to the furniture manufacturer or lumber retailer. Months could have passed since it was first touched by a chain saw in the woods.

Down at the mill, other logs are on deck, awaiting the skilled teamwork of the yardman, the debarker, the sawyers, the edgerman, the trimmerman, and all the others who daily "saw for grade."

Produced by Peter J. Stephano
Photographs: Hopkins Associates
Illustrations: Jim Stevenson

Print this article

YOU GET EXTRA SUPPORT **PLUS** A ROUTER TABLE WITH THESE **DOUBLE-DUTY TABLE-SAW EXTENSIONS**

We took a Sears 10″ table saw with a 20×27″ work surface and expanded it to nearly five times the surface area!

Most projects—and shops, for that matter—center on the table saw. To make your table saw an even more versatile workshop hub, we designed two extensions to increase the work surface. Half of one extension is hinged to drop down out of the way when not in use. We also built in a router table as part of the other extension to make double use of the work surface and table-saw fence.

Note: These extensions fit a Sears 10″ table saw; dimensions may vary for your particular saw. Also, some models such as the Delta (formerly Rockwell) 9″ contractors' saw may require an extra hole or recess on the bottom of the back extension for the motor when tilted in the full 45° position.

START BY CONSTRUCTING THE EXTENSIONS

1 (Before you begin, remove any factory-made metal extensions from your table saw.) Leave the rip-fence rails in place. On a half sheet of ¾″ AA or AB plywood, measure and mark the layout of the main extension (A) and the side extension (B), where shown and dimensioned in the Cutting Diagram. (Remember to mark a cutout for the blade guard on the main extension.) Cut the two extensions (A, B) to size and shape (you will cut the main extension [A] into two pieces later).

2 Trace the outline of both extensions onto the balance sheet. (The balance sheet stabilizes the extensions and reduces the chances of warpage. If balance sheet is difficult to locate in your area, use laminate on the bottom side of the extensions.) Then, score and snap the balance sheet ½″ oversized. Using contact cement, apply the balance sheet to the bottom of both extensions. With a router and a flush-trim bit, trim the balance sheet flush with all edges.

3 From solid birch stock, rip and crosscut the banding strips (C–K) to size plus 1″ in length. Glue and nail strips C, D, and E to the sides of the main extension, and both F's to the sides of the side extension, where shown in the Cutaway Drawing. After the glue dries, scrape off excess glue, then plane or scrape the surfaces flush, being careful not to round-over the edges. Then, use a backsaw to trim the ends of the banding strips flush with the ends of the plywood. Apply the remaining banding strips (G–K) in the same manner. Be sure to avoid nailing into strips I and J where you will rip extension A into two pieces later.

4 Use a compass to mark ¾″ radii on all outside corners of the extensions, where shown in the Top-View Drawing. Cut the corners to shape and sand them smooth.

5 Make a couple of marks 13¾″ from the 48″ side of the main extension to locate the hinge line. Using the marks as a guide, rip the extension in two. You will reattach the long, straight outside piece with a continuous hinge later.

6 Lay the extensions on the laminate and trace their outlines. Cut

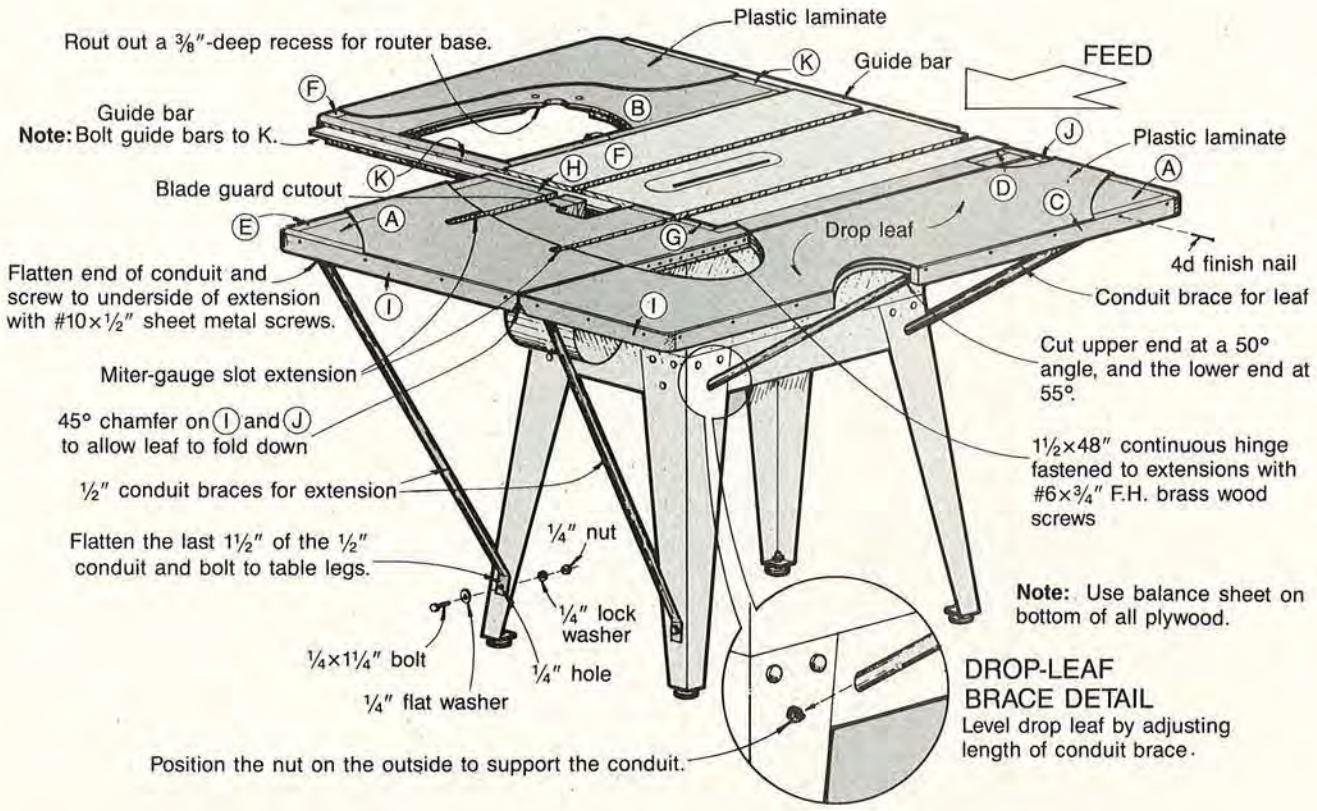
Plastic laminate
Rout out a 3/8"-deep recess for router base.
Guide bar
FEED
Guide bar
Note: Bolt guide bars to K.
Plastic laminate
Blade guard cutout
Drop leaf
4d finish nail
Flatten end of conduit and screw to underside of extension with #10×1/2" sheet metal screws.
Conduit brace for leaf
Cut upper end at a 50° angle, and the lower end at 55°.
Miter-gauge slot extension
45° chamfer on I and J to allow leaf to fold down
1 1/2×48" continuous hinge fastened to extensions with #6×3/4" F.H. brass wood screws
1/2" conduit braces for extension
Flatten the last 1 1/2" of the 1/2" conduit and bolt to table legs.
1/4" nut
1/4" lock washer
1/4×1 1/4" bolt
1/4" hole
1/4" flat washer
Note: Use balance sheet on bottom of all plywood.
DROP-LEAF BRACE DETAIL
Level drop leaf by adjusting length of conduit brace.
Position the nut on the outside to support the conduit.

Bill of Materials

Part	Finished Size*			Material	Qty.
	T	W	L		
A*	3/4"	34 3/8"	46 1/2"	plywood	1
B	3/4"	16"	25 1/2"	plywood	1
C*	3/4"	1 1/2"	46 1/2"	birch	1
D*	3/4"	1 1/2"	27"	birch	1
E*	3/4"	1 1/2"	17 3/4"	birch	1
F*	3/4"	1 1/2"	25 1/2"	birch	2
G*	3/4"	1 1/2"	7 7/8"	birch	1
H*	3/4"	1 1/2"	8 3/4"	birch	1
I*	3/4"	1 1/2"	36"	birch	1
J*	3/4"	1 1/2"	16"	birch	1
K*	3/4"	1 1/2"	17 1/2"	birch	2

*Parts marked with a * are cut larger initially, then trimmed to finished size. Please read the instructions before cutting.

Supplies: 4×4′ balance sheet, 4×4′ plastic laminate, contact cement, 4d finish nails, 2—10′ lengths of 1/2" conduit, 1 1/2×48" continuous hinge with #6×3/4" flathead brass wood screws, 4—broomstick holders, #10×1/2" sheet-metal screws, 2—1/4×1 1/4" bolts with flat washers/lock washers/nuts, oil or polyurethane finish, 4—lag screws and washers

Cutting Diagram

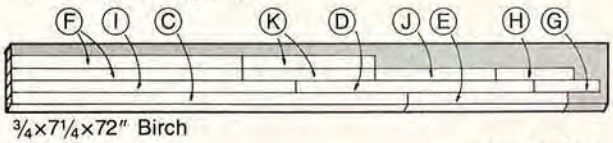

3/4×7 1/4×72" Birch

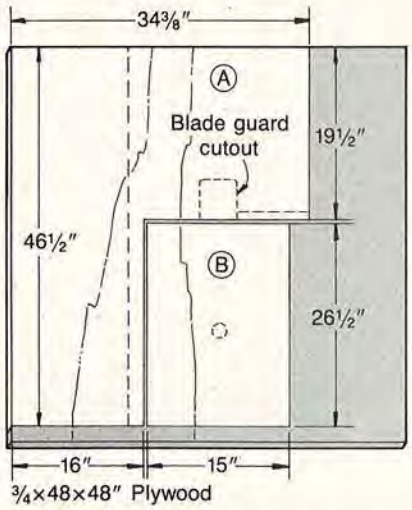

3/4×48×48" Plywood

***Note:* Although the plastic laminate and balance sheet are cut slightly larger than the plywood, the cutting diagram would be similar.**

the laminate 1/2" oversized and apply it to the top of the three extension pieces with contact cement. (Refer to "Applying Plastic Laminates" on p. 30 of the April, 1986 issue of *WOOD* for more information on working with laminates.) Again, using a router and a flush-trim bit, rout the laminate flush. File a slight chamfer along the top edge of the three laminate pieces to dull the sharp edge.

7 Chamfer the mating ends of banding strips I and J where shown in the Cutaway Drawing so that you will be able to fold down the drop-leaf portion of the main extension. (We used a combination square to mark the 45° angles on the banding strips. Then we cut the chamfers with a hand saw and sanded the edges smooth.)

Continued

TABLE-SAW EXTENSIONS

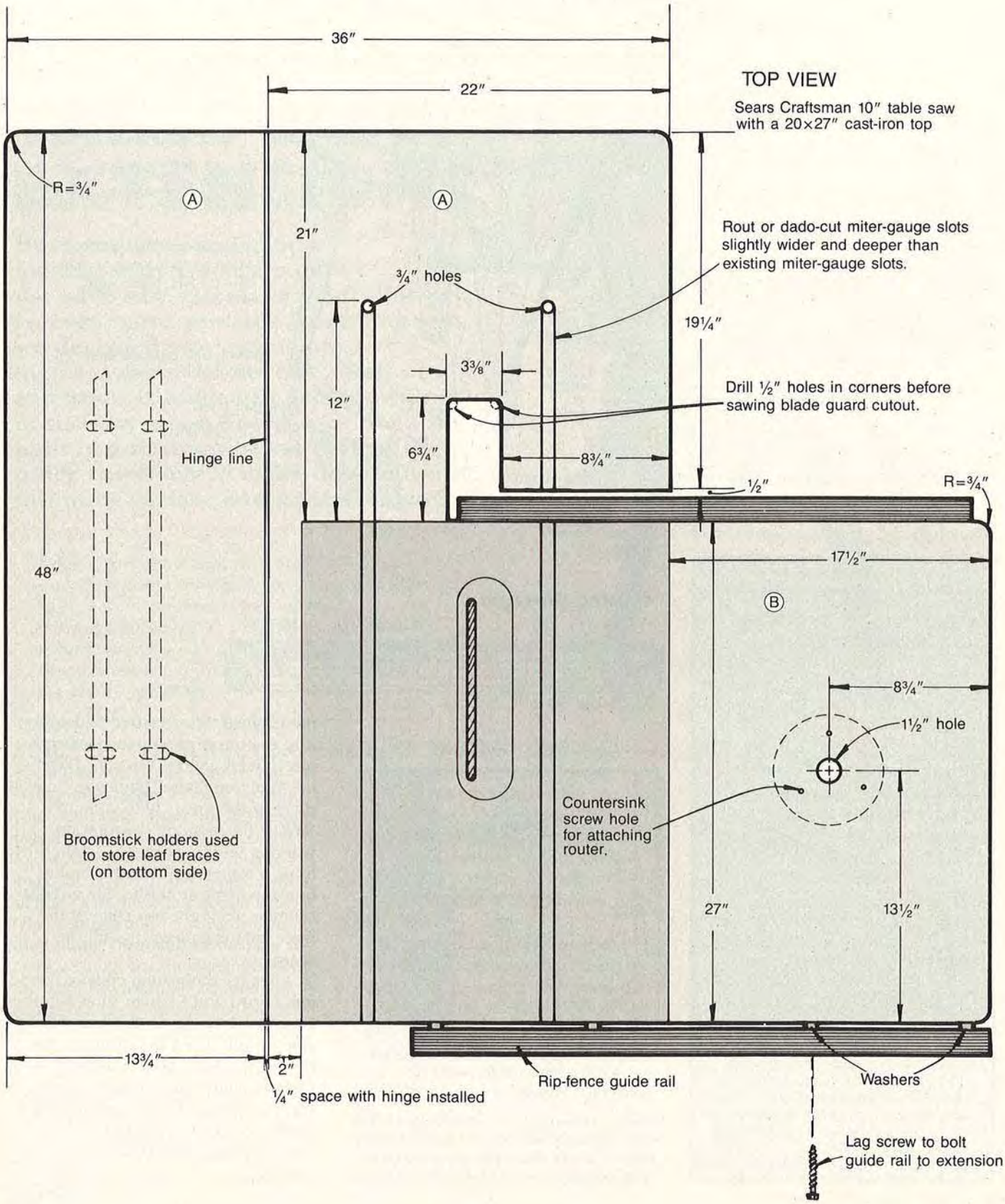

PREPARING THE EXTENSIONS FOR MOUNTING

1 Apply masking tape to the sides and back of the top surface of the saw table, where shown in the Marking the Mounting Holes Drawing, Step 1, *below.* (We used masking tape because it makes a better marking surface.) Then, use a square to transfer the location of the center of each hole to the masking tape.

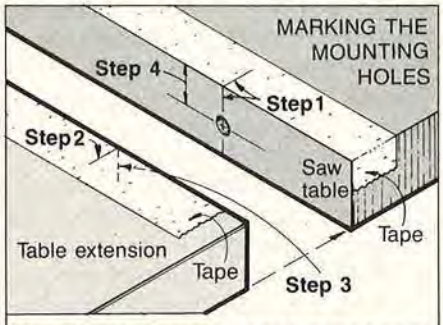

Step 1 Transfer the centerline of the hole to the masking tape.
Step 2 With the extension against the saw table, transfer the mark.
Step 3 With a square, extend the line down the edge of the extension.
Step 4 Measure the distance from the top of the saw table to the centerline of the existing hole. Transfer that dimension to the table extension.

2 Temporarily clamp the right half of the main extension to your saw table, using a helper to hold the extension in position. Apply tape to the adjoining surface of the extension and continue the lines onto the extension (Step 2 in drawing). Follow Steps 3 and 4 to finish marking the mounting-hole locations.

3 Using the Top-View Drawing as a guide, mark the position of the miter-gauge slot extensions and the blade-guard cutout. The slots should extend onto the main extension where shown in the drawing.

4 Using the method just described for the main extension, clamp the side extension to the saw and mark the mounting holes. Now, unclamp both extensions from the saw.

5 Drill 5/16" holes through the edge of the extensions where marked. Using a flat-bottomed bit, drill 1" holes 1/2" deep in the bottom of each extension, centered on the 5/16" holes just drilled (see the How to Attach the Extension Drawing, *top right*).

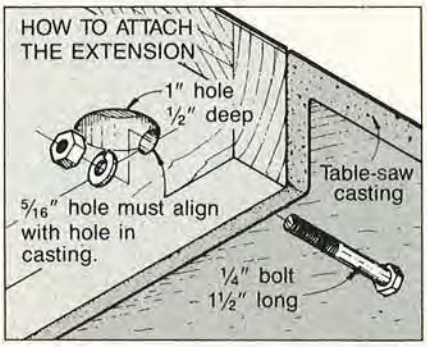

6 Cut the slots where marked in the main extension, making them slightly wider and deeper than the existing miter-gauge slots in your saw table. (We cut ours on a table saw using a dado set and chipped some of the laminate. Avoid this by using a carbide-tipped straight bit in your router to make the cuts. Clamp a straight board to the extension as a fence when routing the slots.) Drill 3/4" holes through the extension at the end of each slot, backing the holes with scrap to prevent chip-out. (The holes help eliminate sawdust pileup in the slots.)

7 Screw the continuous hinge to both sections of the main extension, making sure the ends and top surfaces of each are flush.

8 Place the side extension, laminate-side down on a work surface. Locate and mark the center point of the router-base recess where shown in the Top-View Drawing. Drill a 1/8" hole at this point. Rout a 3/8"-deep recess to house the router base. Flip the extension right-side up and drill a 1 1/2" hole with a hole saw, using the 1/8" hole as a center point.

9 To mount the router to the bottom of the extension, first remove the plastic base from the router. Place the router into the router recess. Then, mark and drill the router-mounting holes (the ones used to attach the plastic subbase). Countersink the mounting holes from the top side to recess the router-mounting screws slightly below the top of the surface. (The location and size of the screws may vary depending on your particular router.)

10 Sand the edges of both extensions smooth and apply finish to the exposed banding.

MOUNTING AND BRACING THE EXTENSIONS

1 Bolt the side extension to the saw table, checking that the surfaces are flush. (We clamped a straight piece of scrap across the saw table and over the extension to true the two surfaces. We also used slightly smaller nuts and bolts than those used with the original extensions. This allows for minor adjustments when trueing the surfaces.)

2 Bolt the extension to the rip-fence guide rails. (We drilled pilot holes and used lag screws to bolt the rails to the extensions. We also placed washers between the front guide rail and side extension.)

3 Bolt the main extension to the saw table (be careful not to put a lot of weight on it until you brace it up). Measure the length of conduit needed for the two back braces. Cut the conduit to length.

4 Using a vise or mallet, flatten the top and the bottom 1 1/2" of each of the back braces. Drill a 5/16" hole through the top flattened end and a 1/4" hole through the bottom. Making sure the extension rests level with the saw table, position one of the braces under the back extension. Bend the flattened ends to fit against one of the legs and the inside edge of I. Drill a hole through the leg, and bolt the brace to the leg, where shown in the Cutaway Drawing. Screw the top of the brace to the underside of the extension. Repeat for the other back brace.

5 The drop-leaf braces sit flush against the inside edge of banding piece C. Turn one of the nuts and bolts around on the leg assembly, where shown in the Drop-Leaf Brace Detail. The bottom of each brace sits on the exposed nut on the leg. Cut the top and bottom of the side braces at an angle for a flush fit against the piece they will mate with. Position the braces on the nuts and under the hinged extension.

6 Attach broomstick holders to the bottom of the leaf to store the braces when the leaf is folded down.

Project Design: James Boelling; Randall Foshee
Photograph: Jim Kascoutas
Illustrations: Randall Foshee; Bill Zaun

Print this article

5 QUICK 'N' EASY

LOOKING FOR THE PERFECT PROJECT TO TACKLE IN JUST AN EVENING

1 OAK BREAKFAST

Four-hour project

You can also use this classic serving tray for supper by the TV, appetizers at a party, or desserts on the patio. Box joints and durable oak team up to make this project as tough as it is eye-pleasing.

Note: *You'll need some ½" oak for this project. You can resaw your own, or order. See the Buying Guide for our source.*

BUILDING THE JIG

1 Build the box-joint jig by first cutting the plywood to size for the fence, and the pine for the stop block to the dimensions shown in the Box-Joint Jig Drawing. Glue and clamp the two pine pieces to make the stop block shown in the drawing at right.

2 Unplug your table saw. Remove the table insert and trace its outline on a piece of ¼" hardboard. (Some saws require a thicker insert; simply plane thicker stock if yours does. The top of the insert should sit flush with the surface of the saw table.) Cut and sand the edges until the insert fits snugly in the recess.

3 Mount a dado blade or dado-blade set to your table saw, and set it to cut ¼" wide. Position the insert in the saw-table recess, and clamp a piece of scrap 2×4 across, but not directly over, the center of the insert. Plug the saw in and start the motor. Raise the rotating blade so that it cuts through the insert to a cutting height of ⅝". Turn the saw off, and lower the blade back to a cutting height of ⅜". Remove the 2×4.

4 Clamp the jig fence securely to the miter gauge and square the miter gauge and jig fence with the dado blade. Run the jig fence across the dado blade to cut the first kerf. Remove the jig fence from the miter gauge, measure over *exactly* ¼", and mark the position of the second kerf, where shown in the Box-Joint Jig Drawing. (If your dado cuts a fraction narrower or wider than ¼", adjust the size of the gap accordingly.)

5 Refasten the jig fence to the miter gauge. Raise the blade to ½" above the surface of the saw table, and cut the second kerf *exactly* where marked. Cut the guide pin to size and glue it in the first kerf. Remove any excess glue.

CUTTING THE BOX JOINTS

1 Rip and crosscut the two tray sides (A) to 2¼×24" and the two tray ends (B) to 3¾×12" from ½" oak stock. (The extra width allows for final trimming later.)

Note: *Test-cut box joints in scrap material the same thickness as the tray sides and ends before you cut the ends of A and B.*

2 To cut the first notch, clamp one of the tray sides (A) to the box-joint jig with the left edge of A perfectly in line with the left edge of the kerf, as shown in the Step 1 Drawing, *below right.* (We used a stop block as shown to ensure that the edge of the side piece remained square with the saw table when we made the first cut.) Clamp the stop in position, clamp A to the jig, and cut where shown in the drawing. (When clamping A to the jig, make A sit flush on the saw table, not the insert. This will ensure that the notches will all be cut the same depth.)

3 Reposition A and the stop block so that the notch rests on the guide pin, as shown in the Step 2 Drawing. Make the second cut. Continue to reposition part A and the stop block,

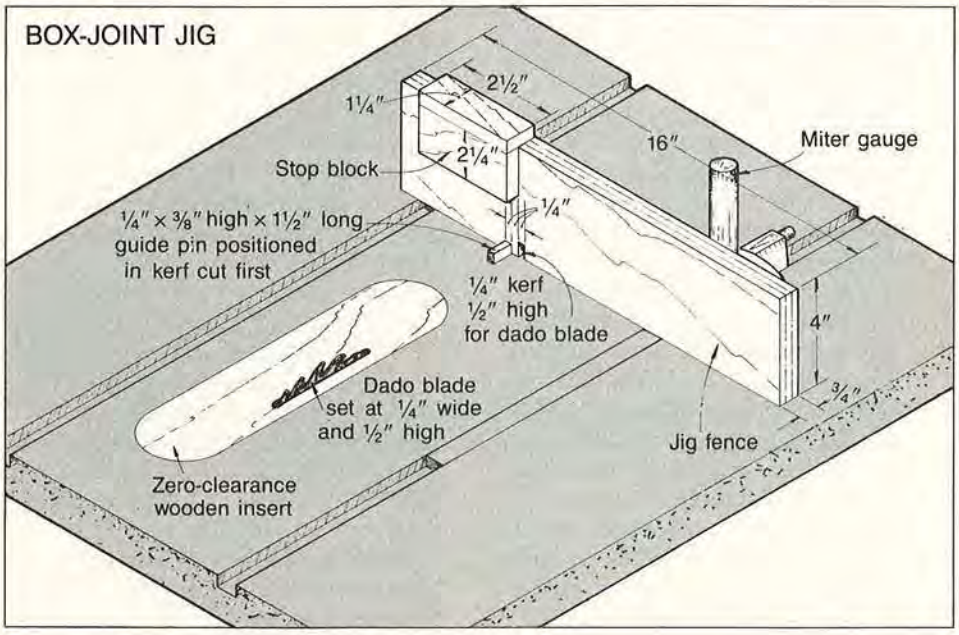

PROJECTS

OR TWO? WE'VE GOT 'EM!

TRAY

making the cuts as shown in photo A, *below right.*

4 Flip A end over end, and cut the notches. Keep the edge that will eventually be the bottom edge of the tray against the stop block when cutting the opposite end. This way, you wind up with a notch on the bottom edge of each end where shown in the Step 2 Drawing. Cut the box joints on the ends of the second A.

5 To make the first finger, position B tightly against the guide pin where shown in the Step 3 Drawing. Clamp the stop block in position and make the first cut.

6 Reposition B and the stop block so that the notch sits on the guide pin where shown in the Step 4 Drawing. Make the second cut, and continue repositioning and cutting. Flip the piece end over end and cut the other end of each B, taking care to keep the bottom edge of B against the stop block.

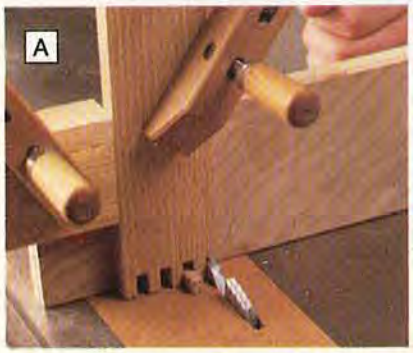

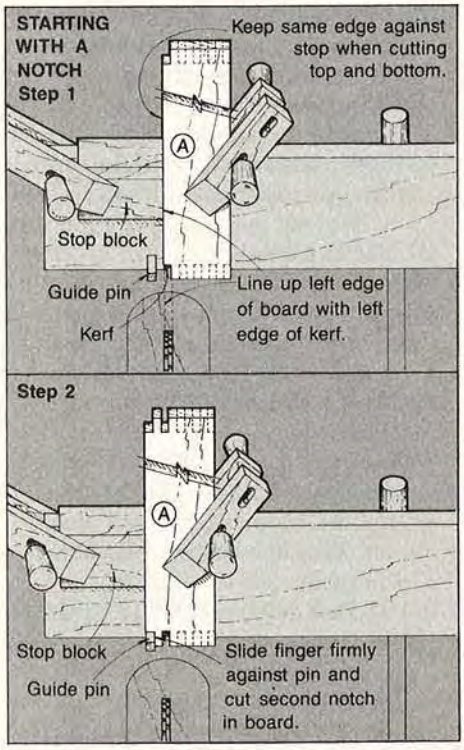
STARTING WITH A NOTCH Step 1
Keep same edge against stop when cutting top and bottom.
A
Stop block
Guide pin
Kerf
Line up left edge of board with left edge of kerf.
Step 2
A
Stop block
Guide pin
Slide finger firmly against pin and cut second notch in board.

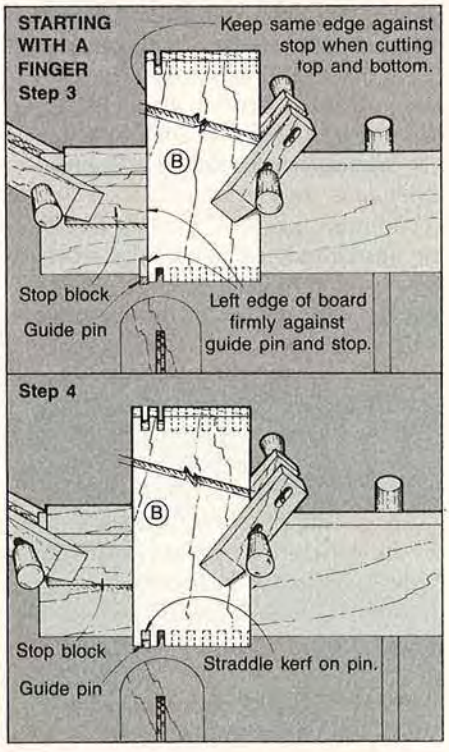

ASSEMBLING THE TRAY

1 Using double-faced tape, attach the two end pieces (B) together, keeping the bottom and side edges flush. Lay out and mark the handle shape and opening on one, where shown in the End-View Drawing.

2 Using a band saw or jigsaw, cut slightly outside the handle outline. Mount a 2½" sanding drum in a drill press. Attach a fence and a stop block to your drill-press table, as shown in photo B. Sand the concave

Continued

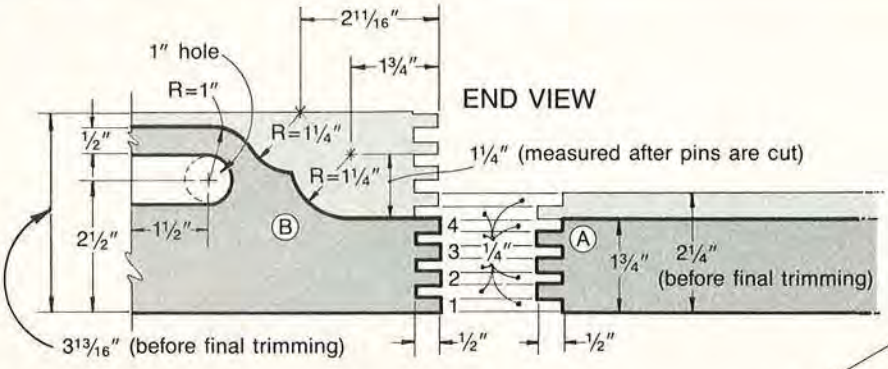

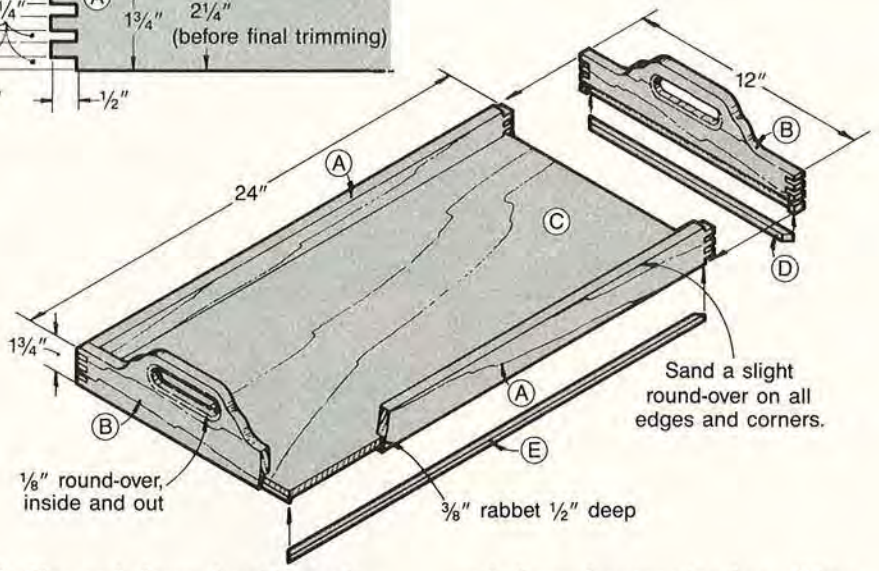

Bill of Materials					
Part	Finished Size*			Material	Qty.
	T	W	L		
A*	1/2"	1 3/4"	24"	oak	2
B*	1/2"	3 1/2"	12"	oak	2
C	1/4"	11 3/4"	23 3/4"	oak plywd. (G2S)	1
D*	1/4"	3/8"	11 3/4"	oak	2
E*	1/4"	3/8"	23 3/4"	oak	2

*Parts marked with an * are cut larger initially, then trimmed to finished size. Please read the instructions before cutting.

Supplies: stain, polyurethane, #0000 steel wool, double-faced tape, paste wax

edges smooth, being careful not to burn the wood. (The fence and stop block help keep the sanding uniform on all radii.) You can also use the front roller on a belt sander to sand the radii smooth.

3 Use a drill press with a 1" bit to drill a hole at each end of the handle slot, backing the handle with scrap to prevent chip-out. Use a jigsaw or scroll saw to remove the stock left between the two holes. Sand the inside edges of the slots smooth.

4 Separate the two end pieces and scrape off any tape residue. Using a 1/8" round-over bit (see the Buying Guide for details), rout both inside edges of the handle slots. (If you don't have a 1/8" round-over bit, hand-sand a slight round-over.)

FINAL STEPS BEFORE SERVING

1 Dry-fit the ends and sides together, and mark the finished width on the top edge of the sides against the finished shape of the ends. Disassemble the pieces, then rip the sides to width according to your marks. Sand the parts smooth.

2 Glue and clamp the sides and ends together, checking for square. Use a damp rag to remove glue squeeze-out from the inside of the corners. To ensure that the tray will sit flat, place waxed paper under the glued box joints, and clamp the tray frame to a flat surface. (We used a small brush to "paint" the glue into the notches. Then we clamped the tray frame to our saw table to keep the frame perfectly flat as the glue dried.)

3 Rout a 3/8" rabbet 1/2" deep along the inside of the bottom edge of the tray using a router with a 3/8" rabbeting bit. (We made two passes using a table-mounted router, raising the bit for the second pass to achieve the 1/2" depth needed.) Use a sharp chisel to square out the rabbets in each of the four corners.

4 Cut the bottom panel (C) to size from 1/4" oak plywood. Check the fit of the panel in the rabbet in the tray frame, and trim if necessary.

5 From 3/4" oak stock, rip enough 1/4×3/8" strips to yield the bottom panel stops (D, E). Miter-cut the panel stops to finished length. With the bottom panel in place, glue and clamp the stops in place. Wipe off glue squeeze-out with a damp rag.

6 When the glue dries, finish-sand the tray. Be careful when sanding the box-jointed corners not to burn the exposed end grain. Hand-sand the handle opening until it is smooth to the touch. Then sand a very slight round-over on all edges to break the sharp edges. Apply stain, followed by two coats of polyurethane. For added protection and a satiny feel, apply paste wax.

BUYING GUIDE

● ***Oak.*** 1/2" stock, $13.61 for 5 1/2×48" piece. Stock no. W4074. Craftsman Wood Service Company, 1735 W. Cortland Ct., Addison, IL 60101. Or, order by phone: 312/629-3100.

● ***Router bits.*** 3/8" rabbeting bit, 1/4" shank. Catalog no. TF32100, $22.10. 1/8" round-over bit, 1/4" shank. Catalog no. TF34104, $22.45. Trendlines, 375 Beacham St., Chelsea, MA 02150. Call 800/343-3248 to order.

Project Design: David Ashe for The Workshop Blueprint Company
Photographs: Hopkins Associates
Illustrations: Randall Foshee, Bill Zaun

2 ROUTER SPECIAL TIE RACK

One and one-half hour project

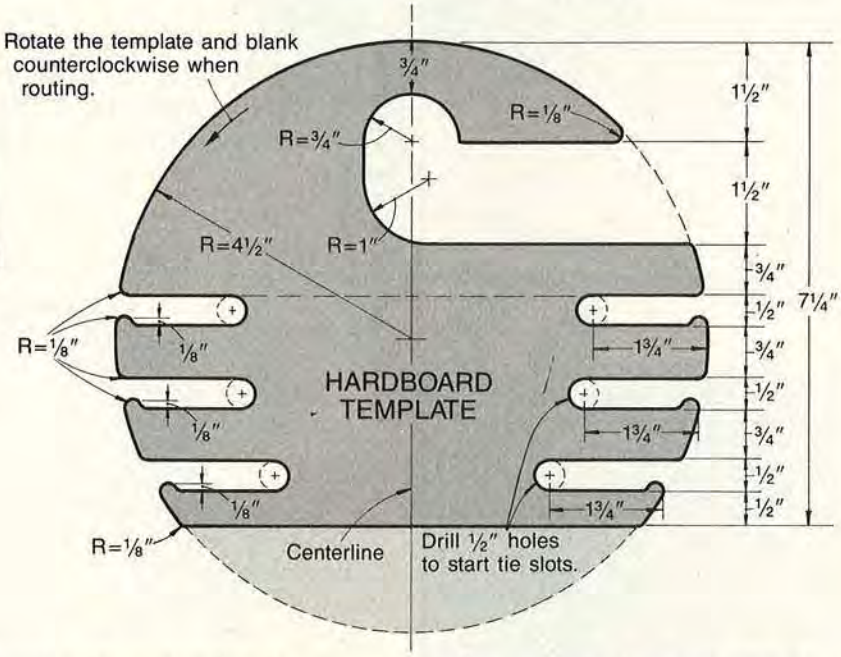

They're almost too easy to be true. You simply make the hardboard template, fit your table-mounted router with a flush trim-bit, and rout away. With our template, you can mass-produce two, 20, or 200 tie racks.

START WITH THE TEMPLATE

1 Using a compass, draw a 9" circle (4½" radius) on a piece of ¼" hardboard. Draw a line through the center point of the circle. Using the centerline just marked and the Hardboard-Template Drawing as a guide, transfer the shape of the tie-rack template to the hardboard where shown on the drawing. (After marking the centerline, we used a square to make lines perpendicular to it for the closet-pole opening and the tie slots.)

2 Drill ½" holes through the hardboard where marked. Using a scroll or band saw, cut the hardboard template to shape.

3 Sand the edges of the template smooth. (Don't rush! The quality of each tie rack depends on how smooth you make the template.)

ROUTING THE TIE RACK

Note: *The three-ply, ⅛" Baltic birch plywood we used for the racks is strong, lightweight, and routs well with a minimum of chipping.*

1 Cut the plywood slightly larger than the template, being sure to keep the face grain running horizontally across the blank.

2 Using double-faced tape, stick the hardboard template to the Baltic birch blank.

3 Fit your table-mounted router with a ¼" flush-trim bit. Raise the bit above the surface of the router table, so that the pilot rides on the blank where shown in the Routing Drawing, *below.*

4 Start the router and, beginning at the edge of the blank, push the bit through the stock until the pilot of the bit comes in contact with the template. Rotate the template and blank counterclockwise, keeping the pilot of the bit against the template.

5 Separate the tie rack from the template and sand the routed edges smooth. (We hand-sanded the edges with 220- and 320-grit sandpaper to prevent snagging any ties.) Apply a minimum of two coats of polyurethane finish.

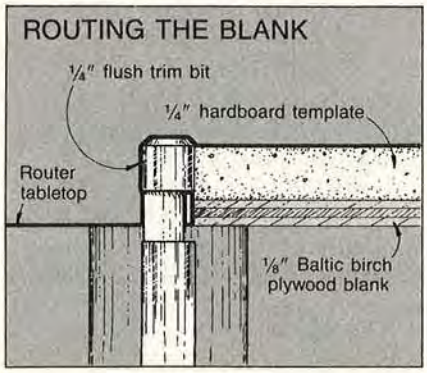

BUYING GUIDE

- ***Flush-trim bit.*** ¼" shank, ¼" cutting edge, 1½" overall length. Catalog no. TF66100, $6.60. Trend-lines, 375 Beacham Street, Chelsea, MA 02150, or phone 800/343-3248 to order.
- ***⅛" Baltic birch plywood.*** Five 10×10" squares for $10 ppd. Trim-craft Aero, Inc., P.O. Box 27, Lyons, WI 53148. Or call 414/763-3036.

Project Design: Randall Foshee
Photograph: Jim Kascoutas
Illustrations: Bill Zaun; Randall Foshee

3 SANDPAPER STORAGE BIN

Two-hour project

Keep sheets of varying grits at your fingertips with this handy bin. Quick-grip shelf cutouts, angled shelves, and a paper-tearing device mean less fumbling and faster finishing.

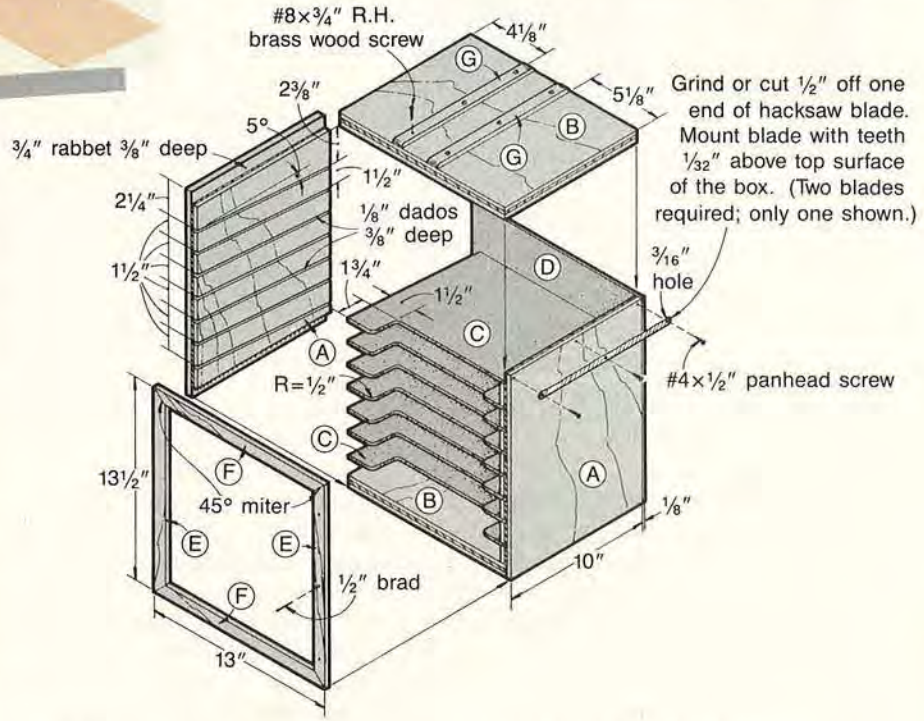

Bill of Materials					
Part	Finished Size T	W	L	Material	Qty.
A	¾"	10"	13½"	plywood	2
B	¾"	10"	12¼"	plywood	2
C	⅛"	10"	12 3/16"	hardboard	7
D	⅛"	13"	13½"	hardboard	1
E	¼"	¾"	13½"	birch	2
F	¼"	¾"	13"	birch	2
G	¼"	¾"	10"	birch	2

Supplies: #4×½" panhead screws, #8×¾" roundhead brass wood screws, ½" brads, 2—10⅜" hacksaw blades, paint, oil finish, wood putty

1 To build the box, cut the plywood frame parts (A, B), the hardboard shelves (C), and the hardboard back (D) to the sizes indicated in the Bill of Materials. Mark and cut the cutouts in the front of each shelf, rounding the corners where shown.

2 Measure, mark, and cut the dadoes and rabbets in the sides (A) where dimensioned in the drawing. (To cut the dadoes for the shelves, we first aligned our radial-arm saw blade with the 5°-angled lines that we just marked. To dado the left side, angle the blade left of center, and for cutting the right side, angle the blade right of center. You could cut the dadoes on your table saw with a miter gauge fitted with an auxiliary fence.) Glue, clamp, and nail the box assembly together.

3 Sand the box. Then paint or finish it to match your shop cabinets.

4 Miter-cut the facing strips (E, F) to length, finish-sand, and attach them to the box with glue and brads. Set the brads and fill the holes.

5 To make the paper-tearing device, first grind the two hacksaw blades to 10" in length. Then, drill a 3/16" hole in the ground end and one in the center of each blade (the blade comes with the third hole predrilled). Drill pilot holes and screw a blade to each side of the box.

6 Cut the tearing guides (G) to size, finish-sand, and attach them to the top of the box where indicated. (The *right* guide is 5½" from the right edge of the box, and the *left* guide is 4½" from the left edge.) When the guides are mounted where shown, you can halve and quarter a standard sheet of sandpaper to fit most palm-grip sanders. Apply an oil finish to the facing strips.

TEARING SANDPAPER TO SIZE

Position a full sheet of sandpaper with the short (9") side against the right-hand guide. Holding the piece firmly against the guide, slowly tear the paper by pulling it down across the hacksaw blade. Now, position the resulting half with the short side against the left-hand guide and tear it in half on the other blade.

Project Design: Marlen Kemmet
Photograph: Bob Calmer
Illustration: Randall Foshee; Bill Zaun

4 PARROT MAGNETS

Three-hour project

Whenever you can build one project and end up with three, THAT'S GOOD. These birds of a different feather make great little gifts, and you can bet they'll get plenty of use, too.

1 Edge-join enough wood strips for two 4¾×6¾" laminations to form the bottom two layers shown in the drawing. Or, simply use a single piece of a different type of wood for each of the three layers. (Don't be afraid to try your own combination of woods and veneers.)

2 After the glue has dried, remove the clamps and plane or resaw all three layers to ⅜". Temporarily join the three layers atop each other with several thin beads of hot-melt adhesive or double-stick tape.

3 Using carbon paper, transfer the Full-Sized Pattern onto the top board. Then cut out the parts with a scroll saw or a band saw with a fine-toothed blade.

4 Separate and intermix the parts to obtain the desired color combinations for each of the three parrots. Sand the backs of the parts smooth, removing any tape gum or hot-melt adhesive. (We sanded the backs by hand, using 150-grit paper mounted on a sanding block.)

5 Round-over the front edges of the parts on a belt sander or sanding drum. Be sure to wear a dust mask and rubber finger pads (sold at office supply stores). Sand each front edge *just* to the back edge (further sanding creates voids between the parts when gluing the parrot together). Sand-shape the top of each piece completely to eliminate flat surfaces.

6 Finish-sand the parts. (We sat down and placed a palm-grip sander between our knees. Then we started the sander and rolled the parts from side to side. Finally, we hand-sanded each part to obtain a smooth surface.)

7 Position the parts on a scrap of ⅛" plywood or other thin stock and again trace the outlines of the three parrots. Remove the parts and cut the patterns on the backing *slightly smaller* than the traced outlines to hide the sides of the backing.

8 Place woodworker's glue or epoxy on the backing and lay the parts into position. If using woodworker's glue, weight the parts with a flat heavy object such as your wife's iron. (We used epoxy, which doesn't require clamping.)

9 After the glue dries, round-over the edges of the backing by sanding to make it even less visible.

10 Rub in an oil finish and epoxy a magnet to the back of each parrot.

Project Design: Karen and August Caryl
Photographs: Bob Calmer
Illustrations: Bill Zaun, Kim Downing

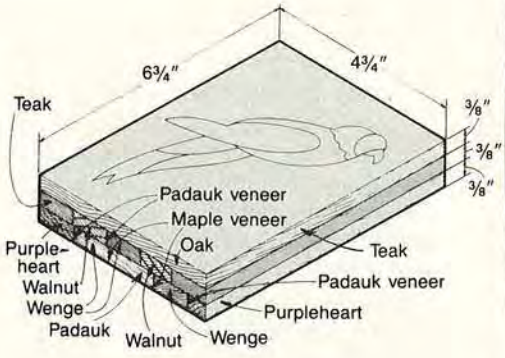

FULL-SIZED PATTERN

Print this article

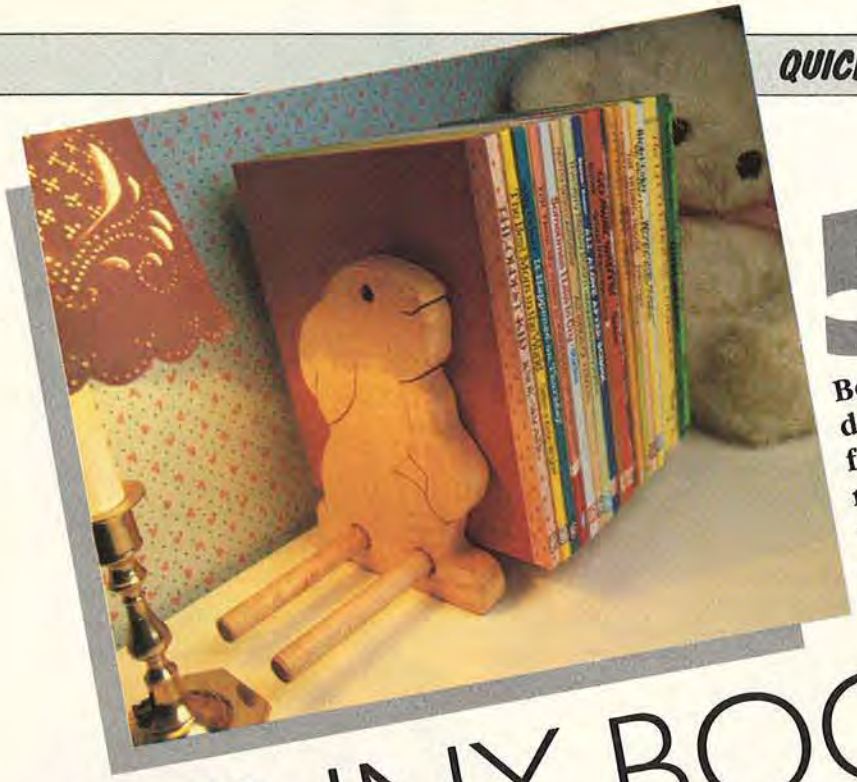

5

Books on the floor, books by the door, books galore! Help your favorite youngster keep his or her mini library in order with these wooden bunnies. The bookends slide on two dowels to organize just a few books or a bunch.

BUNNY BOOKENDS

One and one-half hour project

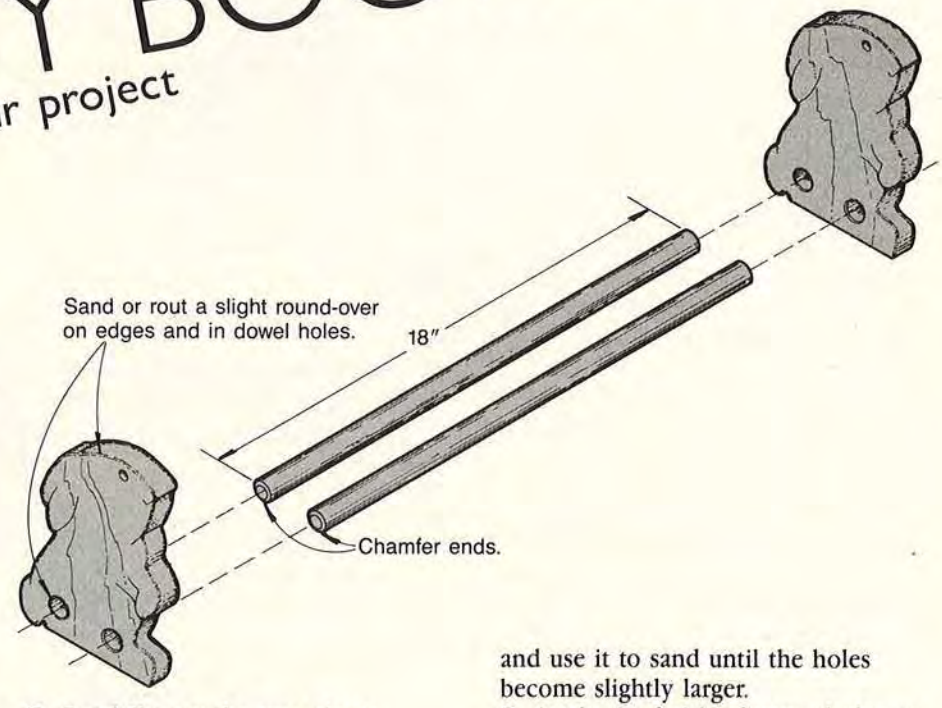

Note: *Use the full-sized pattern on page 76 for ease in layout.*

1 Cut two pieces of clear stock to ¾×6½×9″ each. (We used maple, but most any hard- or softwood will do.)

2 Use carbon paper to transfer the full-sized bunny pattern, detail lines, and hole locations shown on page 76 to one of the maple pieces. Stick the two pieces together, face to face, with double-faced tape or hot-melt glue (remember to keep the pattern on the outside). If you use hot melt, run a bead near the edges of one of the maple pieces. Be careful to keep the glue *outside* of the outline. Then, stick the two pieces together, with the edges flush.

3 Cut the bunny outline and detail lines with a scroll, band, or jigsaw. (We used a band saw with a fine-toothed ⅛″ blade.)

4 Drill ⅜″ holes for the bunny's eyes and ⅝″ holes for the dowels through both layers of wood. Back the pieces with scrap board to prevent chip-out when drilling.

5 Carefully pry the two pieces apart, and remove the tape.

6 Sand or rout a slight round-over on all outside edges of each bunny and inside the ⅝″ dowel holes. Finish-sand each bookend smooth.

7 Cut two pieces of ⅝″ dowel to 18″ in length. Sand a slight chamfer on the ends of each dowel. Hand-sand each dowel so that it slides smoothly in the ⅝″ holes. If the dowel fits too tightly in the ⅝″ hole, wrap sandpaper around a ½″ dowel and use it to sand until the holes become slightly larger.

8 Apply the finish of your choice to the bookends and dowels, and let them dry before assembling. (We hand-rubbed ours with a coat of mineral oil, and let the pieces dry for a few days.)

9 After the finish dries, assemble the project. Position books on the dowels and slide the bookends together.

Project Design: Sharon Sprague
Photograph: Hopkins Associates
Illustrations: Randall Foshee; Bill Zaun

BAND SAW BLADES

WELDED TO YOUR EXACT LENGTH

WIDTHS	TEETH	PRICE/INCH
1/8" thru 5/8"	3 thru 32	$.05

COMPLETE BAND SAW BLADE LINE INCLUDING SAW MILL BLADES

TO FIGURE PRICE:
Inch Length x Price/Inch + $1.85 Weld Charge

MINIMUM ORDER $10.00. Add $2.50 per order for packing and shipping. MasterCard and VISA accepted.

TO ORDER Phone or write to:

BUCKEYE SAW COMPANY
P.O. Box 14794, Cinti., OH 45214
1-800-543-8664 (Except Ohio)
1-513-621-2159 (In Ohio)

LAMINATED *Southern Pine* TABLE TOP

Make your own Woodworker's Bench

For information write:
Southern Pine, Box 1056
Bay Minette, AL 36507

What's a JOINT-MATIC 4200?

A Joint-Matic 4200 is the unique system in joinery that is so advanced in design and simplicity that set up time has been all but eliminated.

Now in minutes make precision Mortise, Tenon, Sliding and Through Dovetails, Box Finger Joints and much much more.

For Your Brochure, Please Send $2.00 to:

Strong TOOL DESIGN
20425 Beatrice
Dept. W
Livonia, MI 48152

BUILD THIS MINI-BARN

Measuring a spacious 12 × 18 ft., our little shed lets you house garden tractor, yard tools and lawn furniture. BONUS: Plans include a workbench you can build. Send $14 ppd. for plans. Catalog of country furniture plans costs $1 (free with Barn plans order). Allow 4 weeks.

HAMMERMARK ASSOCIATES,
Box 201, W8, Floral Park, NY 11002.

PEG

TEN POUNDS IN A PAIL!

by Pitsco

Box 1328
Pittsburg, KS 66762
316-231-0000

Complete Catalog—124 Pages
$4.00. . .Reimbursed on first order

MAKE TOYS & WOOD PROJECTS

7 CAR TRAIN
$6—Plan only.
$27.50—Plan & turned parts (92 parts in all!).
Visa & M/C

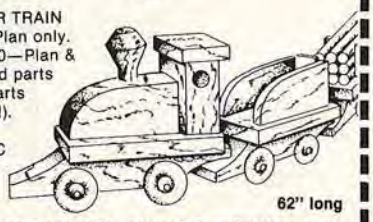

62" long

100's of plans, kits, colored & unfinished hardwood parts for toys, crafts & furniture; plus tools, wood, finishes & supplies. Bulk prices available. Color catalog subscription $1. (614)484-4363

Cherry Tree Toys, Box 369-9, Belmont, OH 43718

Wood Moisture Meter

- Avoid Moisture Problems
- Protect your Masterpiece

Mini-Ligno
$110 only

Pocket-Size: 1"x2¾"x5½" Incl. Case, Batteries, and Pins for ⅜" and ⅞" Measuring Depth.

also from Lignomat:
Mini-Ligno E
Range: 6, 7,..,36%

Easy to use, sturdy instrument for the professional woodworker or serious hobbyist. Great for lumber, veneer, fiberbrds. Ask for free catalog on all moisture meters and accessories for kiln drying. Don't waste money, time on wet wood, order a moisture meter now.

Lignomat USA Ltd.
503-257-8957 800-227-2105
P.O. Box 30145 bh
Portland, OR 97230

SHAKER PEGS
CANDLE CUPS
MUG PEGS

$17.95 per 100, prepaid.
Wide selection of other wood products.
Catalog $2.00 or free with order.

Benny's Woodworks
P.O. Box 656, Dept. WD1
Antioch, TN 37013
(615) 331-8384

22½° OCTAGON GAUGE

TO SET MITER TO SAW BLADE FOR 22½° CUT. HARDENED ALUMINUM GAUGE HAS OCTAGON FORMULAS AND 14" RULER SCREENED ON. ALSO SCREW CHECKER AND INFORMATION.

$7.95 Plus $2.00 Handling and Shipping

California residents add 6% sales tax. Send check or money order to:

LYON ELECTRIC COMPANY, INC.
P.O. BOX 81303 SAN DIEGO, CA 92138

EXTENSIVE EXOTIC & DOMESTIC INVENTORY

FLITCH-CUT LUMBER OUR SPECIALTY

DOUSSIE
AFRORMOSIA
ZEBRAWOOD
AMAZAKOUE
PURPLEHEART
GONCALO ALVES
MORADO
ANDIROBA
BUBINGA
IMBUYA
PADOUK
PALDAO
WENGE
SAPELE
RED OAK
WHITE OAK
CHERRY
POPLAR
WALNUT

Wyndham Woods

THICK VENEERS FOR BENDING

THIN WOOD FOR SMALL PROJECTS

ARCHITECTURAL QUALITY EXOTIC & DOMESTIC VENEERS

For the World's Finest Lumber & Veneer at Reasonable Prices send $1.00 for Brochure & Price List to:
WYNDHAM WOODS, P.O. Box 506
Ellettsville, IN 47429 / PH. 812-334-7735

Van Dyke's

Presents a Catalog

with supplies for upholstery, antique restoration, wood working, caning, brass hardware, carvings and many related trades!

VAN DYKE SUPPLY COMPANY · SUPPLIES FOR CREATIVE ARTS AND TRADES ·

36 Years in Creative Arts & Trades

Many Hard-To-Find Items!

SEND $1.00 FOR CATALOG TO:
Van Dyke's Restorers
Dept. D55 · Woonsocket, SD 57385

National Carvers Museum

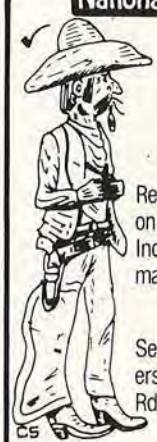

LEARN WOODCARVING AT HOME

Receive sample instructional pack on whittling and woodcarving. Includes copy of *Mallet* monthly magazine.

Send $1.00 to The National Carvers Museum, 14960 Woodcarver Rd., Monument, CO 80132.

BUNNY BOOKEND PATTERN

(Full size)

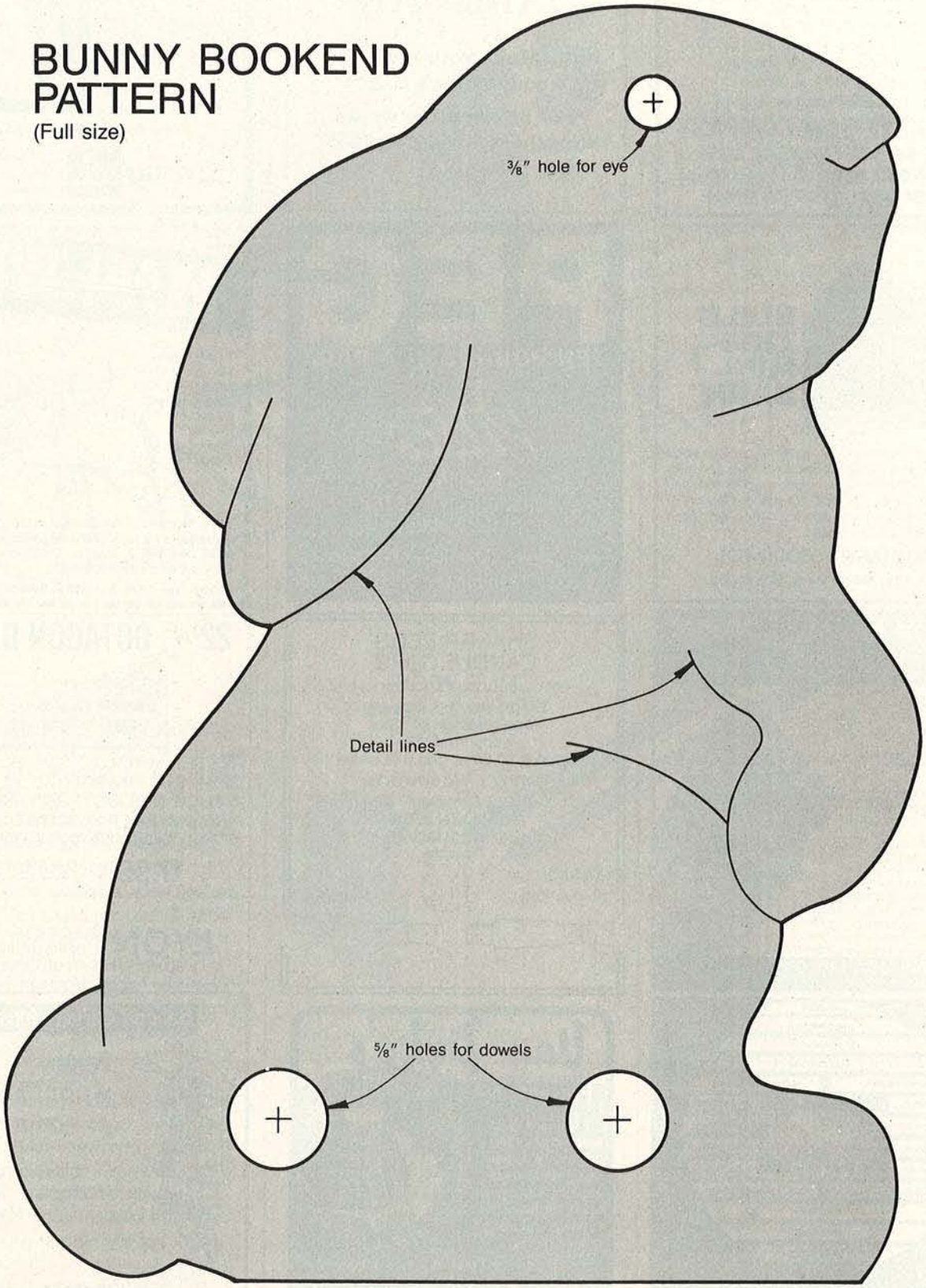

The only thing small about this bandsaw is the price!

The new BS-3 Benchtop Bandsaw is BIG...BIG in capacity, performance, convenience *and* quality...yet it takes up just 1½' x 3' of bench space. Its built-in disc sander adds the BIG advantage of sanding right on the saw. BIG 15" throat. BIG 6¼" cutting depth. BIG quiet-running 3-speed motor has plenty of power for Wood, Metal or Plastic. BIG 16" x 18" worktable tilts up to 45°. This BIG 86 lb. Benchtop Bandsaw comes with a built-in vacuum hook-up, a BIG list of accessories (drum and belt sanding, and more) ...and BIG Buyer Protection. Call or write today. If you think that high quality has to mean high price ...you're in for a real surprise.

emco☆USA™

Dept. BW76B • 2080 Fairwood Ave.
P.O. Box 07795 • Columbus, OH 43207

1-800-521-8289
(In Ohio: 614/445-8382)

'Low Cost Cutters'®

Three Wing, Carbide Tipped
Shaper Cutters with 3/4" bores.
(Bushings available to reduce bore to 1/2")

MADE IN U.S.A.

Carbide Tipped **Raised Panel Shaper Cutters**
(Wood Samples Shown - Not Actual Size)

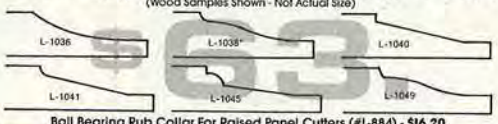

Ball Bearing Rub Collar For Raised Panel Cutters (#L-884) - $16.20.

6 Piece Carbide Tipped **Stile & Rail Shaper Cutters**
(Wood Samples Shown - Not Actual Size)

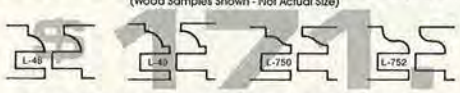

Ball Bearing Rub Collar For Raised Panel Cutters (#L-884) - $16.20.

Carbide Tipped **Door Lip Shaper Cutters**
(Wood Samples Shown - Not Actual Size)

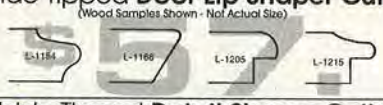

Carbide Tipped **Detail Shaper Cutters**
(Wood Samples Shown - Not Actual Size)

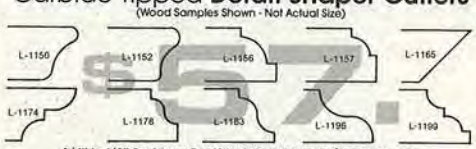

3/4" to 1/2" Bushings For Stile & Rail Cutters - $12.00 Per Set.
3/4" to 1/2" Bushings For ALL Cutters EXCEPT Stile & Rail Cutters - $9.00 Per Set.

SATISFACTION GUARANTEED

Make Payment Payable To:
L. R. Hubert Saw
P. O. Box 61
Reseda, California 91335
818 / 782-0225

ORDER FORM Simply Submit A Note Describing The Item(s) Desired.
California Residents, Please Add Sales Tax — ALL ORDERS SHIPPED U.P.S., PREPAID
Method Of Payment: ☐ Cashier's Check or Money Order
☐ VISA ☐ MASTERCARD
Card # _____ Exp. Date _____
Name _____
Address _____
City _____ State _____ Zip _____
Credit Card Signature _____

A forest fire is no picnic.

Ad Council *A Public Service of This Magazine & The Advertising Council*

Turning into a better craftsman can be as simple as turning the pages of our new catalog.

Our new 244 page catalog is filled not just with pictures of great hand and power tools, but carefully written specs, detailed illustrations and recommendations from craftsmen who've spent much of their lives making, using and testing tools.

You'll know what they look and feel like, and you'll know how they fit your needs.

We believe you're not the average craftsman. So why should we give you an average catalog?

GARRETT WADE COMPANY The Yankee Wood Craftsman

Garrett Wade Co., Dept. 119
161 Ave. of Americas, N.Y., N.Y 10013
Please send me your 244 page catalog of wood working tools, machinery and accessories. Enclosed $3.00.
Name _____
Address _____
City _____
State _____ Zip _____

HUMFREY'S FOR
EXCALIBUR II

SUMMER SALE!
MENTION THIS AD WHEN YOU ORDER.
SAVE $50.
(Sale ends August 31/86)

EXCALIBUR II PRECISION SCROLL SAW

FREIGHT UPS PREPAID
SUMMER SALE
$445. U.S.*
~~$495.~~ U.S.*
NO OTHER CHARGES
*Electrics extra

- 1400, 800 & 400 Strokes/PM
- 19" throat, up to 2" thick
- Accepts all 5" blades
- Table tilts 45° left & right
- Cuts wood, plastics, metals etc.

VISA
HUMFREY'S ORDER PHONE IN THE U.S. CALL TOLL FREE
1-800-387-9789
MasterCard

J. Philip Humfrey International

3241 Kennedy Road, Unit 7 Department WM 7/8b
Scarborough, Ontario M1V 2J9 (416) 293-8624
Please rush me details of the EXCALIBUR II Precision Scroll Saw.
Name _____
Address _____
City _____ State _____ Zip _____

WHEEL-RIGHT Wheel Maker

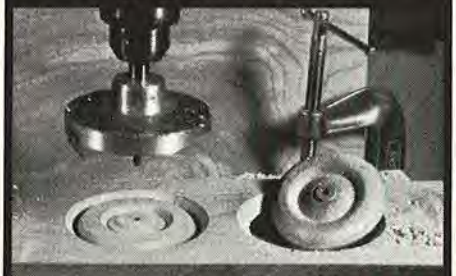

Never before possible a professional wheel maker that allows you to quickly mass produce detailed quality wooden wheels at a low low cost. Also turn out Rosettes and YoYo's.
$59.95 plus $2.00 shipping and handling

The Tool Company
1306-G South Commercial
P.O. Box 629, Dept. BHG-10
Harrisonville, MO 64701
(816) 884-2679
Mo. Res. add 5.625% Sales Tax

Sleeveless DRUM SANDER
NO PRE-MADE SLEEVES TO BUY

ECONOMICAL — Simply cut sandpaper from standard size sheets
UNIQUE — Twist of key tightens sandpaper to drum.
SPONGE RUBBER backing insures long wear of sandpaper

1" x 3" long	$13.50
2" x 3" long	$15.50
2½" x 3" long	$16.00
3" x 3" long	$17.50
1" and 2½" Above $27.00	
Above 4 Drums $55.00	
¾" x 3" long	$14.50
2½" x 4½" long	$21.00
3" x 4½" long	$22.50
2½" x 6" long	$25.50
3" x 6" long	$27.50

Add $2.50 Per Order For Shipping

AVAILABLE WITH:
½" Bore with ½" or ¼" shaft
½-20 RH Thread except ¾" x 3"
⅝" Bore except ¾" x 3" and 2" x 3"

USE ON:
Drill Press
Small Motor
Lathe, Combo-Tools,
Radial Saw, ¼" Drill

MONEY BACK GUARANTEE

Send Check or Money Order to:

SINGLEY SPECIALTY CO. INC.
P.O. BOX 5087B, GREENSBORO, N.C. 27403
CALL: (919) 852-8581

Full Size Plans

Toddlers love riding Charlie Horse. He is 11 x 22 x 26 high & easily built of pine.
Plan-335 ..... $4.50

Jib Crane swivels on ball bearings and has two working hand controls. Height 24"
Plan-319..... $4.00

Our great collection of five toy vehicles is easily built with hand & power tools. Trailer is 18" long & 7" tall. **Plan-18004..... $8.50**

Add postage 50¢ per plan. NY Res. add tax.
Catalog $1.00—Free with plans. Phone (516) 462-6228
We accept Visa & MasterCard orders if over $15.00

ARMOR, Dept. L, Box 445, E. Northport, NY 11731

SIGNCARVING *IS PROFITABLE!*

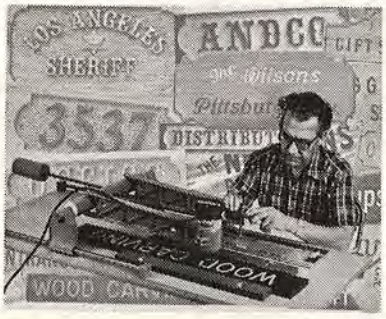

And it's easy, if you use the Marlin Woodcarvers and accessories. You can carve signs quickly at home or at swap meets. The machines do the work, the operator has the fun and profits.
No Special Training Is Required!

SEND $1.00 FOR OUR BROCHURE AND PRICE LIST, AND BEGIN TO PLAN YOUR FULL OR PART-TIME BUSINESS.

Fine Carving Machines Since 1971

MARLIN INDUSTRIES
1911 OBISPO AVE., DEPT. D608
LONG BEACH, CA 90804
(213) 498-0767

MARLIN CARVING MACHINES

For information about placing an advertisement in *Better Homes and Gardens® WOOD* write:

Mark Hart
750 Third Avenue
New York, NY 10017

Or call collect:
212-551-7099

TEST YOUR IMAGINATION

Create Any Hollow Cylindrical Shape up to 12" dia. Cut flat wood into straight or angle rings, stack rings, glue, sand, & finish, *All* on your Ring Master.

ORDER YOUR *FREE* BROCHURE TODAY
1-800-854-9815
In Florida 305/859-2664

We accept
Master Card, Visa, C.O.D. and phone orders

P.O. Box 8527A, Orlando, FL 32856

RING MASTER™

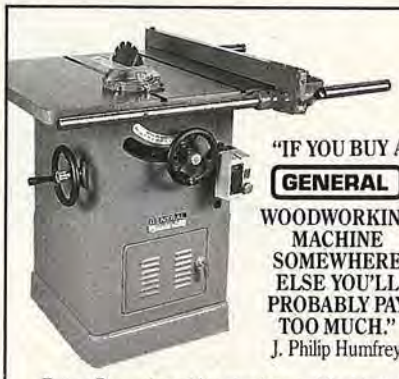

"IF YOU BUY A **GENERAL** WOODWORKING MACHINE SOMEWHERE ELSE YOU'LL PROBABLY PAY TOO MUCH."
J. Philip Humfrey

Every General machine receives and is shipped with Humfrey's all-points inspection report.

CALL TOLL FREE **1-800-387-9789**

#350 10" Table Saw	#1180-1 6" Jointer
$1345. US FREIGHT COLLECT	$765. US FREIGHT COLLECT
3 HP motor, Magnetic switch	1 HP motor, Manual switch
#160-2 Variable Speed Lathe	#490-1 15" Bandsaw c/w Base
$1095. US FREIGHT COLLECT	$845. US FREIGHT COLLECT
1 HP motor, Manual switch	1 HP motor, Manual switch

SIMILAR SAVINGS ON OTHER GENERAL MACHINES

J. Philip Humfrey Ltd.
We sell more General year after year - the reason is value - we satisfy our customers!

CATALOG $2.00 (Refundable from order)
3241 KENNEDY ROAD, UNIT 7
SCARBOROUGH, ONTARIO M1V 2J9

VISA MasterCard

A Complete New Combination Kit for Whittling and Carving By WARREN TOOL CO., INC.

BASIC WOODCARVING

Basic Woodcarving lesson book, prepared by the National Carvers Museum, teaches and illustrates proper carving techniques through clear instructions and simple projects.

#COMBI-TCE $79.95 + $2.25 p&h
OUR FINEST COMBINATION WHITTLERS AND CARVERS KIT
Contents: 1 Redwood Box, 1-#CWH-R Rosewood handle, 1 #L-Palm Walnut handle, (one each) #PTV-1, #LBG, #SBG, #PTV-2, #STC, #STG, #SFTG, #SKU, Gouges, 1-#LD2 (Large Blade), #6SBL (6-Small Blades), 1-Leather Strop Block, 1-Abrasive Paper Block, 1-Instruction Booklet. All blades and gouges sold in their own plastic storage tubes to avoid damage to these honed ready-to-use tools.

WARREN TOOL CO, INC.
Rt. 1, Box 14A-W, Rhinebeck, NY 12572
Catalog 60¢ FREE with order • (914) 876-7817
N.Y. residents add 5.25% sales tax • Foreign shipping: "all foreign orders (including Canada) send MO in US funds plus additional $1.75 for P&H.

Print this article

THE MILLWRIGHT

Stop sometime where an old road crosses a river. Look upstream. With luck, you'll spot the ruins of an old, water-powered mill.

There, in days long past, stood the equivalent in oak of a 40-ton Swiss watch: A wooden machine that harnessed energy from the river and directed it to spin a millstone for pulverizing grain or pull a saw blade to make planks from timber.

Few wood craftsmen faced the Herculean challenges of perhaps the most pragmatic tradesman of early America—the millwright. Simply moving the huge timbers, a single one of which would outweigh a brace of oxen, called for extraordinary ingenuity. Despite the immense size of the timbers needed for the huge waterwheel, axle, and gears, the joints between them had to be perfect, with no play at all.

To appreciate the millwright's task, let's journey to the America of 1700.

A stout heart of oak—the axle

A mill could do nothing without its waterwheel, and the waterwheel nothing without its axle. The axle, the mill's real heart, had to support the 4-ton dead load of the wheel and the force of the rushing water as well.

Only heart of white oak would do for the all-important axle—2′ in diameter, 18′ long. One could plant a field of corn and see it come up in the time it took to hew such a timber. A man could see his children half-grown before it was seasoned. The timber had to be extraordinarily stout because it served two purposes.

Unlike the familiar role of the carriage axle, the axle of a waterwheel also acted as its hub. To accomplish this dual purpose, millwrights long ago developed a unique joint. By interlocking three long timbers inside the huge axle, they made an extraordinarily strong, six-spoked wheel (see drawing, *left*).

Where the timbers crossed at their midpoint, the millwright cut lap joints. This enabled him to join the timbers within elongated mortises cut entirely through the massive axle.

Continued

For grinding or sawing power, the mill used huge gears driven by the river. This mill still stands at Phillipsburg Manor, Upper Mills, North Tarrytown, N.Y.

WATER AND PIT WHEEL ASSEMBLY

The millwright made the waterwheel and pit wheel by lap-jointing three timbers (A, B, C) for each component inside the oak axle.

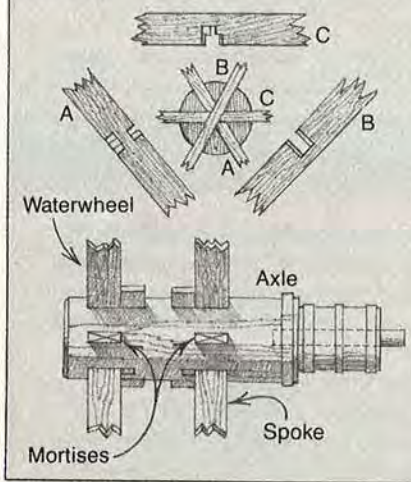

By Roy Underhill

Master housewright at Colonial Williamsburg and host of the popular PBS series The Woodwright's Shop, *Underhill is also an author and lecturer.*

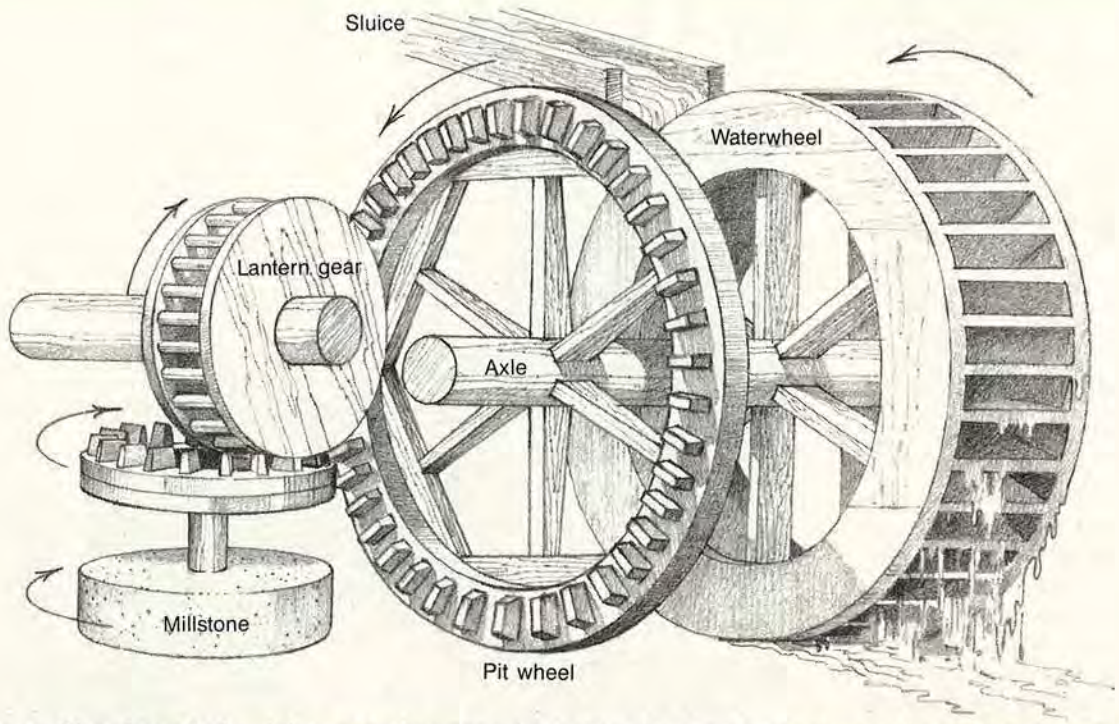

Water rushing through the sluice turns the waterwheel. The pit wheel on the same axle matches the waterwheel's turns. Its cog teeth mesh with the vertical lantern gear to transmit power to the horizontal gear for grinding.

Completed, the assembly produced six spokes that could never slip.

The millwright cut the lap joint in the timber spokes with common carpenter's tools. But the mortise through 2′ of white oak required a heavy mortising chisel with a 1½″-wide, 19″-long shaft weighing 3½ lbs. A powerful swing of a hefty mallet, repeated over and over again, drove it through the oak.

Cogging up the pit wheel

In all but the simplest mills, the millwright would make the gears that the rushing power captured by the waterwheel. This called for super precision, for where the waterwheel needed only to mesh with the accommodating river, the cog-laden gears inside the mill represented wood running against wood in an endless search for flaws.

The millwright directed most of his considerable skill to the all-important *pit wheel,* the main driving gear that transmitted power from the waterwheel. For every one of its revolutions, the pit wheel turned the companion *lantern gear* six times.

Mounted inside the mill on the waterwheel axle, the oak stock used to make the pit wheel turned as if on a lathe. As it turned, the millwright scribed the centerline for the mortises that would house the replaceable beech, maple, or applewood cog teeth. Then he paced off their exact locations around the gear's circumference with a pair of dividers.

Boring and chopping the mortises could take days, but there was no rushing. The 100 tapering shanks of the cogs, their tooth ends rough blocks, had to fit perfectly into their mortises. Should one later come loose, the resulting shock of the joining gear's jump could break out the rest of the teeth before the frantic miller could stop the wheel.

Shaping proper gear teeth

Only when all the cogs had been sledgehammered in around the pit wheel could the millwright shape them into proper gear teeth.

With a scribing tool fastened to the stationary timber of the mill itself, this maker of massive gears marked on the oversized cog blocks the extent of the path they would travel. Their length now determined, the blocks were sawn off.

Then, the limits of precision were expanded. The millwright paced off the tooth spacing around the cogs, setting and resetting his dividers until they ended at the precise point where they began. Sometimes the adjustment was so fine that it could only be made by filing away part of one of the divider points.

When the intervals were finally even, the millwright pared away the tough wood to shape the teeth on the cogs. All had to be identical in shape and spacing, for if one stood out it would wear unevenly, and get worse, not better, with time.

When a tooth was out of step, the miscalculation could be plainly heard from the running mill as it recited the craftsman's faults with every turn. Only the unremitting care and diligence of the capable millwright could bring the even rumble of gears and wheels meshing that was music to a miller's ear.

Photograph: Sleepy Hollow Restorations
Illustrations: Jim Stevenson

JSE-60
Electronic Var. Spd.
Jig Saw

AP-10
10" Portable Planer

Both for $409 **$359** *Delivered*

Send $3.00 for the most COMPLETE catalog of fine hand tools & cabinet makers supplies !!!!! (refunded with first order)

CALL TOLL FREE 800-452-9999 In VA. 800-468-1778

7305 BOUDINOT DRIVE
SPRINGFIELD, VIRGINIA 22150

The best way to choose the right hardware.

Our *Classic Hardware* 40 page, color catalog takes out the guesswork by showing every item full size.

Choose from the finest English made Solid Brass hardware. Many pieces can be called "original" as the same molds have been used for over 100 years.

Write today for your catalog: $1.00.

Dept. H8
Garrett Wade Co.
161 Ave. of the Americas
New York, NY 10013

LOW PRICES • HIGH QUALITY
Toll Free Phones! • 1-800-624-3938
In Ill. 1-800-358-4208

The Toymaker Supply Co.

and

***Love* - Built Toys**
105 Weiler Rd. T34
Arlington Hts., IL 60005

For Volume Purchases of Quality Toy Parts..Write or Phone Today For Free Catalog!

The Japan Woodworker's Catalog is . . .

loaded with the best tools you can get your hands on. In our catalog you will find a complete selection of Japanese tools for the woodcarver, carpenter and cabinetmaker. Send $1.50 for our catalog and supplements during the next two years.

THE JAPAN WOODWORKER
1731 Clement Ave., Alameda, CA 94501
Phone (415) 521-1810

CLEAN UP YOUR ACT!

PRICE -
*Unbeatable value
$450.00 FOB NJ

PORTABLE -
*5 Roller Castors

POWERFUL -
*¾ HP Motor

PERFORMANCE -
*Quiet non-metalic Construction
*Easy trash bag disposal

Send $1.00 for full color catalog to:
ELEKTRA BECKUM U.S.A. CORP.
P.O. Box 24, Dept. JA
Somerdale, NJ 08083

POWERMATIC

MODEL 66 - 10" TA SAW

5 H.P. 3 Phase or
3 H.P. Single Phase
48" Rails. Ext. Wings

ONLY
$1569 FOB McMinnville

Order No. 1660760
Biesemeyer Fence $125 Extra
#26 Shaper $1,625

WORKBENCH TOOL CO.
2833 Perry St.
Madison, Wisconsin 53713
1-800-792-3505 Ext. 233

SHOPSMITH® OWNERS

Make raised panels using our 3 wing carbide tipped shaper cutters.

Shaper Cutter
(4 1/2" dia.)
List $138
Sale $99
Auxiliary table–$30
(Plan only $8)
Arbor–$22

All prices post-paid to 48 states
Send check, MO; VISA, MC accepted
(C.O.D. - add $3)

MANNY'S WOODWORKER'S PLACE
602 S. Broadway
Toll Free 1-800-243-0713 **Lexington, KY 40508** **In Kentucky (606) 255-5444**

BAND SAW BLADE SPECIALISTS

SPECIAL OFFER
Buy Six Blades, Get One Free.

Band saw blades cut and welded to your exact specifications

WIDTH	TEETH	PRICE/INCH
⅛" thru ¾"	3 thru 32	$.04

Price=inch length x price per inch+1.75 weld charge

NO MINUMUM ORDER
Speedy Delivery
Add $2.50 for shipping & handling
S.C. residents add 5% sales tax
Send payment with order — write or call

ROBERTS HARDWARE
P.O. Box 1276 • Taylors, SC 29687
803/879-2470

NEW! High-Precision SCROLL SAW AT A SENSIBLE PRICE!

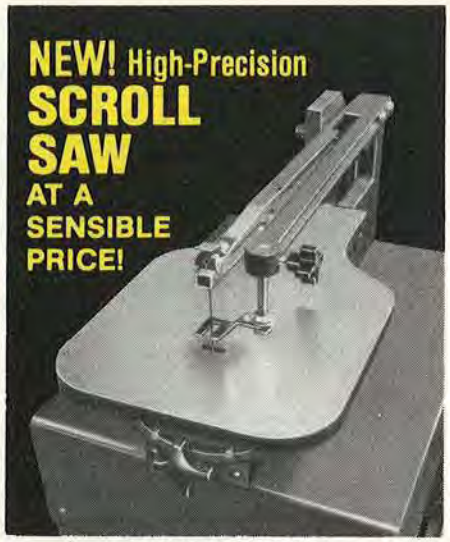

30-DAY FREE TRIAL!

Use this high-precision saw to make hundreds of profitable, unusual items . . . toys, name-bars, filigree work, clocks, holders . . . the list is nearly endless! Because the Model 1600 cuts so smoothly, sanding is virtually unnecessary!

The new Woodmaster Model 1600 gives you a big 16-in. throat capacity, 2-in. cutting depth, a generous, oversize worktable, ball-bearing drive . . . and much more! Made in U.S.A. **Easy Terms.**

Send today for free information kit!
Phone Toll Free 1 (800) 251-4888, ext. 2513

Woodmaster Tools, Dept. CW13
2908 Oak, Kansas City, MO 64108
Name _____
Address _____
City/State _____ **Zip** _____

WOODWORKERS

DOWEL AND TENON CUTTER SETS

SIZE
1/4" dia.
5/16" dia.
3/8" dia.
1/2" dia.

4 PC. SET IN WOOD CASE

SALE $29.95 PPD

FREE CATALOG SUBSCRIPTION WITH PURCHASE.

CATALOG ONLY.
2 year subscription (8 issues) $4.00.
Free $5.00 gift certificate with catalog order.

R. A. NESS & CO.
THE WOODWORKERS EMPORIUM

8888 N. MILWAUKEE AVE.
NILES, IL 60648
(312) 824-0565

VISA MasterCard

TOOL CITY AND RYOBI

SPECIAL SALE

12½" PLANER/ JOINTER COMBINATION
Unlike others it has 2 planing feed rate:
MODEL AH115 19.7 ft/min & 29.5 ft/min
SALE PRICE $1295.00 PREPAID LIST $2399

2-SPEED 12½" PLANER
2-speed feed rate 19.7 and 29.5 ft per min.
MODEL AP125
SALE PRICE $995.00 PREPAID LIST $1859.00

MITER SAWS
#1 Worldwide
TS251V accessory kit-$20
TS 380 accessory kit-$33

BLADE SIZE	MODEL#	LIST	SALE
10"	TS251V	$329	$159 PPD
14"	TS380	$599	$389 PPD

NEW MODELS
PLUNGE ROUTERS
Both models include FREE accessories $39 Value!

HP	MODEL#	LIST	SALE
1HP	R151	$169	$99 PPD
3 HP	R501	$279	$169 PPD

MODEL BS360NR
RESAW BANDSAW
Cuts Wood up to 12 3/16" thick. Comes with 3" wide stellite blade. Accepts blades from 1/4" to 3" wide
SALE PRICE $1279.00 PREPAID LIST $1899

MODEL BS50N
RESAW BANDSAW
Cuts wood up to 7" thick. Comes with 2" wide stellite blade.
LIST $1089
SALE PRICE $695.00 PREPAID

MODEL RA2500
RADIAL ARM SAW
Ball bearing motor 2¼ HP. Accessory Spindal rotates 17,600 RPM for routing & shaping. Carriage slides on 6 ball bearings.
LIST $589
SALE PRICE $389.00 PREPAID
STAND - $39.95

MODEL JSE60
ELECTRONIC JIG SAW
with 4 position orbit blade assortment included!
SALE PRICE $119 PREPAID LIST $209

NEW!
MODEL AP10
10" PLANER
13 amps, power feed
LIST $689
SALE PRICE $365.00 PREPAID
Set of Extra Blades $29.95

MODEL BD1025R
2-SPEED CORDLESS DRILL/ DRIVER
9.6 Volt
1 hour quick charge
5 clutch postion settings. LIST $179
SALE PRICE $109.00 PREPAID
FREE Holster 10.95 Value

MODEL S 500 A
1/6th Sheet PAD SANDER
1.5 AMP
12,000 opm
LIST $79
SALE PRICE $29.95 PREPAID

NEW!
TR 30U TRIMMER
with straight guide and trimming guide
LIST $129
SALE PRICE $79.00 PREPAID

TOOL CITY
14136 E. FIRESTONE BLVD.
SANTA FE SPRINGS, CA. 90670
(213) 802-1236 OPEN MON - SAT 8 AM - 5:30 PM

CALL TOLL FREE
INSIDE CALIF. 1-800-826-7819
OUTSIDE CALIF. 1-800-423-7899
VISA ■ MasterCard ■ PERSONAL CHECK ■
FREE WITH ORDER - TOOL CITY CATALOG

OLD HAND TOOLS

Continued from page 49

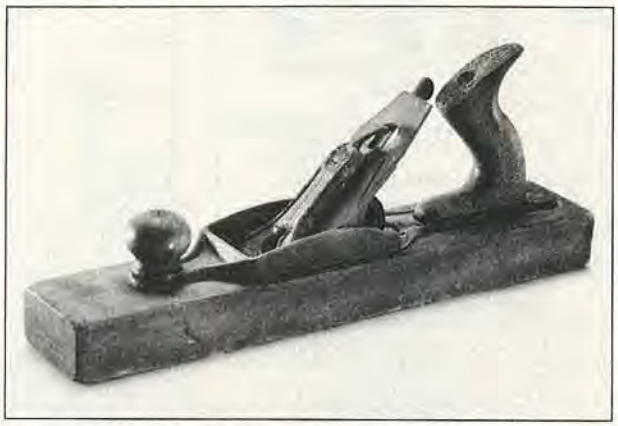

CLARIFY YOUR OWN LINSEED OIL FOR RECONDITIONING OLD TOOLS

Linseed oil goes on easy and protects both wood and metal finishes with a tough finish. That's why old-tool collectors prefer it. But even commercially prepared boiled linseed oil becomes tacky to the touch and may eventually cause an "alligatored" finish. To avoid this, you have to remove the residue from the oil, or "clarify" it.

Begin by pouring linseed oil into a clear glass container. Add two iodine crystals (the type used to purify drinking water), then place the container in direct sunlight for about two weeks. When a considerable amount of gunk settles to the bottom, remove the clear upper oil layers and decant them to a clean vessel.

The clear oil will outperform the store-bought variety as a wipe-on finish.

WHAT'S THAT OLD TOOL WORTH?

Collecting old tools rates high interest these days, and you'd probably be amazed at the prices some of them bring.

If you have a Stanley Bailey No. 5¼C jack plane with a corrugated bottom (circa 1922-42) buried in your basement, it's worth close to $200. A Stratton Bros. 8" rosewood, brassbound level (circa 1900) could bring you $250.

Most old tools arent' worth nearly that much, but you'll never know the value of yours without some research and guidance.

Here's a good book to start with: *The Antique Tool Collector's Guide to Value,* by Ronald S. Barlow, 1985, Windmill Publishing Co., 2147 Windmill View Rd., El Cajon, CA 92020; $12.95 plus $1.05 postage.

Tool prices and descriptions appear in *The Fine Tool Journal,* a bimonthly newsletter. The subscription price is $15 a year. Write: *The Fine Tool Journal,* RD #2, Poultney, VT 05764.

Written with Vernon U. Ward—dealer, collector and publisher of *The Fine Tool Journal*
Photograph: Bob Calmer

HOW WOOD-WISE ARE YOU?

Fact or fiction? Test your knowledge of wood characteristics with these questions. You'll find the answers on page 84. P.S. No cheating!

1. Wood changes color naturally, whether or not you apply a finish to it.
   ☐ Fact ☐ Fiction
2. Wood shrinks equally in all directions as it dries.
   ☐ Fact ☐ Fiction
3. All woods float.
   ☐ Fact ☐ Fiction
4. Wood dowels are round.
   ☐ Fact ☐ Fiction
5. Fast-growing trees make better lumber for woodworking than the slow-growing species.
   ☐ Fact ☐ Fiction
6. All hardwoods are hard.
   ☐ Fact ☐ Fiction
7. Of all common building materials, wood is known to be the best insulator.
   ☐ Fact ☐ Fiction
8. Branches rise higher off the ground as a tree grows.
   ☐ Fact ☐ Fiction
9. The water in green wood makes it stronger than dry wood.
   ☐ Fact ☐ Fiction
10. Heavier woods will shrink and swell less than less rigid lightweight woods.
    ☐ Fact ☐ Fiction
11. Wood only needs to be finished on one side, where it shows.
    ☐ Fact ☐ Fiction
12. All woods burn readily.
    ☐ Fact ☐ Fiction

Answers on page 84

HARDWOODS OF MEMPHIS
NASHVILLE LITTLE ROCK
2000 Elm Hill Pike, Nashville, TN 37210
5105 McClanahan Dr., N. Little Rock, AR 72116
"Fine Woods & Tools"
Over 60 Species of Hardwoods: Both Native & Exotic. Quality Hand & Power Tools. Veneer. Plywood. Books. Carving Blanks, Turning Squares, Bits & Blades.
■ DELTA ■ MAKITA ■ HITACHI ■
■ RYOBI ■ PORTER-CABLE ■ INCA ■
The Complete Woodcraft Supply Store!
2667 Jackson Ave., Memphis, TN 38108
1-800-321-5239

HORTON BRASSES
Nooks Hill Road, P.O. Box 120J
Cromwell, CT 06416 (203) 635-4400
HORTON BRASSES are authentic copies of 17th, 18th, 19th & early 20th century pulls

Mfrs. of Cabinet & Furniture Hardware for Homes & Antiques.
Send $2.00 for a Catalogue.

WOODWORKER'S CATALOG

There are over 3,000 money-saving reasons why woodworkers rely on Constantine.
3,000 woodwork items–to help you **Build-Restore-Repair-Refinish!** Over 200 different woods... 150 veneers...500 plans...cabinet hardware... 96 How-To Books...118 carving tools and chisels... 76 inlay designs...and lots more for **One Stop, Right-Price Shopping** without leaving home!
116 Page Catalog–Only $1.00
$2.00 refunded on 1st order.
CONSTANTINE Est. 1812
2054L Eastchester Road, Bronx, NY 10461

BUILD A CLASSIC

2 Full Size Patterns for Chrysler Sedan & Graham Bros. Truck - Plus Catalog - $10.00

10 Spoke Wheels - Plus Catalog - $7.50
Catalog Alone - $1.50.

TOY DESIGNS
DEPT. BW886 - BOX 441
NEWTON, IOWA 50208

THE RENOVATOR'S SUPPLY®
America's Number One source for old-style reproductions at factory-direct prices! Door, window and cabinet hardware; lighting and bathroom fixtures; and gifts in brass, oak, porcelain, and wrought iron. 48-page color catalog $2.00.
4068 Renovator's Old Mill
Millers Falls, MA 01349

Make Easy Money Building Clocks!

M88 QUARTZ MOVEMENT
2-3/16" Square
5/8" Thick
On-Off Switch
Buy the Best for Less!
Only $3.95 ea.
(WITH THIS AD)
Price includes hardware, hanger and FREE HANDS!
Add 25¢ ea. for second hands.
Shipping & Handling $2.00 per order.
Quartz Clock Movements
Catalog 786
Catalog 786 - 50 pages of clock movements, accessories, and more! $1.00 - Free w/order.
$25 minimum charge card sale.
Cas-Ker Co.
P.O.Box 14069-R
Cincinnati, Ohio 45214
Phone (513) 241-7073

Easy Wood Finishing with WATCO®

The Original and Still the Best

DANISH OIL FINISH

You'll be amazed at how easy it is to finish wood beautifully with Watco Danish Oil. Watco gives wood that natural hand-rubbed look with long-lasting durability. And because Watco is **IN** the wood . . . not on it like temporary surface coatings... there is no finish that will wear off. Watco Danish Oil is ideal for furniture, antiques, paneling, cabinets, doors, and trimwork. It's also safe for butcher blocks, cutting boards, and children's toys. Choose from 8 beautiful finishes . . . Natural, and Medium, Dark, and Black Walnut shades, and Cherry, Golden Oak, Fruitwood, and English Oak colors.

Send today for your "FREE" color booklet "How to Finish Wood Beautifully and Easily" . . . and the name of your nearest Watco Distributor.

WATCO-DENNIS CORP.,
1756 22nd Street
Santa Monica, CA 90404, Dept. BH-W86

Name _____

Street _____

City _____

State _____ Zip _____

213/870-4781

This VET Did It – and YOU Can Do It Too!

"War injuries left me badly handicapped, but now I'm a financial success as a Locksmith, thanks to your training. Besides, the work is fascinating. If I can do it anybody can." — Glen Johnson, Larned, Kan.

Make Up to $26.00 an Hour — even while learning!

Train FAST at Home!

Be a LOCKSMITH!

If you enjoy fixing things, you're a "natural" to make hundreds of EXTRA DOLLARS a year in the fascinating business of Locksmithing. Rising crime has increased demand for service a thousandfold. **Yet there's only one Locksmith for every 17,000 people!**

COLLECT CASH PROFITS ALMOST AT ONCE!

You're "in business" ready to make $10 to $26.00 an hour a few days after you begin Foley-Belsaw's shortcut training. Easy illustrated lessons complete with ALL practice equipment **PLUS**

- **ALL TOOLS YOURS TO KEEP**
- **KEY MACHINE YOURS TO KEEP**
- **EXPERT PERSONAL ASSISTANCE**
- **BUSINESS-BUILDING HELP**

enable you to get your share of this always-profitable business. Hundreds we've trained are doing it. So can YOU.

MAIL COUPON to discover how Locksmithing can keep the extra money coming in during spare time — or in your own full-time business. Ideal for retirement—good jobs, too.

FOLEY-BELSAW INSTITUTE, 10944 Field Bldg.
Kansas City, Mo. 64111

N. Hunt, Wilmington, Del.—"I make $50 a week extra."

R. Davis, St. Louis, Mo.—"I cleared $110 last Saturday."

Ed Boyle, Pittsburgh, Pa.—"My business going at top speed. I'm moving to bigger quarters."

MAIL THIS COUPON • NO SALESMAN WILL CALL

FOLEY-BELSAW INSTITUTE, **10944 Field Bldg.** Kansas City, Mo. 64111

FOLEY-BELSAW

Rush **FREE** book, "Keys to your Future."

Name _____

Address _____

City _____ State _____ Zip _____

THIS DO-ALL PRO
KEY MACHINE YOURS TO KEEP!

Can add $50 to $100 a week to your income . . . and doesn't cost you a penny extra!

QUIZ ANSWERS

Questions on page 83

1. *Fact.* Most all woods change color after exposure to light and air, even with a finish. Walnut, for instance, bleaches to a yellow color.
2. *Fiction.* Flat-sawn wood can shrink nearly twice as much in width as in thickness, and in length, hardly at all.
3. *Fiction.* Only wood with a specific gravity less than that of water (1.0) will float. Lignum vitae, at 1.2, for instance, sinks.
4. *Fiction.* Because of the way the wood shrinks, dowels are actually slightly oval, rather than round.
5. *Fiction.* Slow-growing trees have more annual rings per inch, resulting in a better texture for machining and shaping.
6. *Fiction.* Balsa, which you can carve with your fingernail, is a hardwood.
7. *Fact.* Air in its cell structure makes wood 15 times better at insulating than concrete and 32 times better than steel.
8. *Fiction.* Branches never get any higher off the ground than where they first appeared because a tree grows from the top, not the bottom up.
9. *Fiction.* Strength increases with dryness, but flexibility decreases.
10. *Fiction.* Lightweight woods shrink and swell less.
11. *Fiction.* A surface not sealed allows moisture to travel.
12. *Fiction.* Jarrah, from Australia, carries a Class B fire rating because it will only burn when confronted with a permanent flame.

HOW DO YOU RATE?

0–3 correct — Knothead
4–6 correct — Out on a limb
7–9 correct — A cut above the rest
10+ correct — Standing tall

ASSOCIATIONS YOU SHOULD KNOW ABOUT

THE SOCIETY OF WOOD CRAFTSMEN

We usually devote this space to a U.S. association that's been around a while. But this time we want to tell you about a promising group, formed in England in 1985, that already has 1,400 members from that country and North America.

A professional heritage hobbyists can draw upon

Like a yearling colt from thoroughbred stock, the Society of Wood Craftsmen hasn't yet made a big name for itself, but you can trust the heritage. It evolved from the Guild of Master Craftsmen, a group of professional woodworkers in the United Kingdom and the Guild of Master Craftsmen International.

Explains the Society's director, Alan E. Phillips: "The two professional guilds, with over 2,500 members, were beleaguered with queries and requests from hobbyists. Not anxious to recruit amateur members, the guilds suggested a new organization, and the Society was born."

Thanks to the link with the two professional organizations, Society members can share in the woodworking knowledge and experience of professionals—without furnishing credentials of expertise.

Woodworking with an Old-World view

Why would U.S. woodworkers want to join an association in England? "Contact with Old World craftsmen, the exposure to a different view of woodworking, and our resources and publications," answers Phillips.

Society activity centers in a Georgian-style building in Lewes, East Sussex, less than an hour's drive south of London. It houses a library, information service, antique woodworking tools, and exhibitions of members' work. Resident experts are on hand to answer questions.

A primary membership benefit comes from the Society's publishing company, offering a wealth of woodworking publications (many of which normally are available only in England) at an attractive 40 percent discount. Even with $3 Trans-Atlantic postage per book, you still save. *Woodworking Crafts Magazine,* a well-illustrated quarterly of techniques and projects with both metric and standard U.S. measurements, costs members $14 a year, plus $3 postage (non-members pay $20 annually). There's also a free newsletter, a discount tool catalog, and course offerings.

Annual membership, plus a one-time initiation fee, totals $30. For more information, write: *The Secretary, The Society of Wood Craftsmen, Dept. W, 166 High St., Lewes, East Sussex, BN7 1YE, England (postage for a ½-ounce letter will cost you 44 cents).*

TOOLS ON SALE™
AMERICA'S LOWEST PRICED TOOLS
★ PLUS ★ ··· FREE ··· Freight On Every Item

STATIONARY TOOL SELL-A-THON

		LIST	SALE
MAKITA			
2020--	8" Longbed Jointer w/elec. brake 12A	1700	850
2040--	15⅝" Planer 13A	1780	1150
2030--	12" Planer-Jointer	1980	1150
2030N--	12½" Planer-Jointer w/elec. brake	2160	1350
RYOBI			
BS50N--	7" Band Saw	995	585
BS360NR--	12" Band Saw	1936	1150
RA2500--	10" Radial Arm Saw	536	385
AP-125--	12½" Planer	1680	950
AH-115--	12½" Planer-Jointer	2195	1245
DEWALT by BLACK & DECKER			
3436--	12" Dewalt Radial Arm Saw	1550	1240
7790--	12" Contractors Radial Arm Saw	1045	836
7749--	10" Deluxe Radial Arm Saw	606	485
7779--	10" Contractors Radial Arm Saw	710	568
3486--	8" Rip & Crosscut Panel Saw	1034	827
DELTA			
34-621--	Contractors saw w/o motor 9"	551	425
34-710--	Super 10" Saw — 1 H.P.	621	475
15-091--	15" Floor Model Drill Press	510	395
15-090--	15" Bench Model Drill Press	510	395
11-072--	32" Radial Drill Press	409	330
22-651--	RC33-13" Planer — 2 H.P.	1729	979
46-140--	11" Lathe w/Stand w/o Motor	448	350
33-150--	Sawbuck-Frame & Trim Saw	707	499
33-990--	Deluxe — 10" Radial Saw	630	475
33-890--	12" Radial Saw w/1½ H.P. Motor	1422	950
28-283--	14" Band Saw comp/ ¾ H.P. Motor & enc. std	970	670
28-243--	14" Band Saw w/open steel stand less motor	621	475
28-560--	16" Motorized Band Saw comp. w/stand	467	349

FREE FREIGHT TO THE 48 STATES — 1 DAY SHIPPING
1986 TOOL CATALOG AVAILABLE
Call Toll-Free 1-800-328-0457 — In Minnesota Call (612) 224-4859
4 WAYS TO BUY: CHECK — MONEY ORDER — VISA — MASTERCARD
SEVEN CORNERS ACE HDW. Inc.
216 West 7th St. · St. Paul, MN 55102 · *Est. 1933*

MAKITA • PORTER CABLE • ROCKWELL • BOSCH • LION
BLACK & DECKER • MILWAUKEE • FORSTNER • JORGENSEN • 3M • W.L. FULLER
MARPLES • RECORD • WATCO • NU-LIFE • DOWEL-IT-CLESCO • GILLESPIE • FREUD
HEGNER • STANLEY • GREENLEE • HENCKELS • MERIT

freud INDUSTRIAL

10" CARBIDE TIPPED BLADES

Blade	Description	Teeth	List Price	Hiller's Price
LU84	Combination	50	74.51	37.25
LU85	Combination	80	110.88	55.44

Prices Quoted Delivered PPD on $75.00 Order

WRITE FOR OUR NEW FALL/WINTER CATALOG
1411 Assembly Street
Columbia, S.C. 29202
P.O. Box 1762
(803) 779-3131

NOW! Get in on the PROFITS in SMALL ENGINE REPAIR!

Start your own money making business!

Work part time, full time—right at home—we help you every step of the way.

No doubt about it... as a small engine pro, you can cash in on the huge demand for qualified men in one of America's fastest growing industries. You'll be able to command top hourly rates of from $25.00 to $30.00 per hour — and that's just for labor. A simple tune-up earns as much as $49.95 for less than an hours work, and parts, engines and accessories will add even more to the profits.

Plenty of business waiting for qualified men.

65,000,000 Small Engines Are In Use Today!

That's the official count from the Engine Service Assn., and one-million new engines are being built each month. With fully accredited Foley-Belsaw training, you can soon have the skills and knowledge to make top money servicing these engines. People will seek you out and pay you well to service their lawnmowers, tillers, edgers, power rakes, garden tractors, chain saws, minibikes, snowmobiles, generators, go-carts, paint sprayers, snowblowers . . . the list is almost endless.

Professional Tools and Equipment, PLUS 4 H.P. Engine ALL YOURS TO KEEP... All at No Extra Cost.

NO EXPERIENCE NECESSARY!

You don't need to be a 'born mechanic' or have any prior experience. You can master this profitable trade right at home in your sparetime. Lessons are fully illustrated...so clear you can't go wrong, and with our famous 'learn-by-doing' method you get practical 'hands-on' experience. We also show you how to get business, what to charge, where to get supplies wholesale...all the inside tricks of the trade you need to assure success right from the start.

Send for FREE Facts—Do It TODAY!

NO Obligation—NO Salesman Calls!

You risk nothing by accepting this offer to see how easily you can learn the skills you need to increase your income in a high-profit business of your own. Just fill in and mail coupon below (or send postcard with name and address) to receive full information by return mail.

RUSH COUPON TODAY
Foley-Belsaw Institute
50941 Field Building
Kansas City, MO 64111

FREE BOOKLET! Send for your copy today!

FOLEY-BELSAW INSTITUTE
50941 FIELD BUILDING
KANSAS CITY, MO 64111

FOLEY BELSAW

☐ YES, please send me the FREE booklet that gives full details about starting my own business in Small Engine Repair. I understand there is **No Obligation** and that **No Salesman** will call on me.

NAME_____

ADDRESS_____

CITY_____

STATE_____ ZIP_____

DRILL PRESS COUNTER-WEIGHT

Makes the Going EASY

Raising and lowering a drill press table can be a real nuisance. Not only are most drill-press tables cast iron and heavy, but they're also cantilevered from a post, making them difficult to adjust. Now you can build a simple counterweight system that'll take the hassle out of table adjustments, using principles as old as the ancient Egyptians. Here's how we built ours.

Project Design: Gary Hood
Photograph: Hopkins Associates
Illustrations: Bill Zaun

Print this article

Construction starts with the counterweight itself (see the sketch, *below*). Thread a coupling and a plug onto one end of a 10″ length of 1½″-diameter galvanized pipe. Then fill the pipe with wet sand or old nuts and washers. (You may have to increase or reduce the amount of fill later, depending on the weight of your drill-press table. You want the counterweight to be slightly lighter than the table.)

Next, drill a 5/16″-diameter hole in another pipe plug. Thread one end of the nylon rope through this hole, and tie a knot in it. Lightly singe

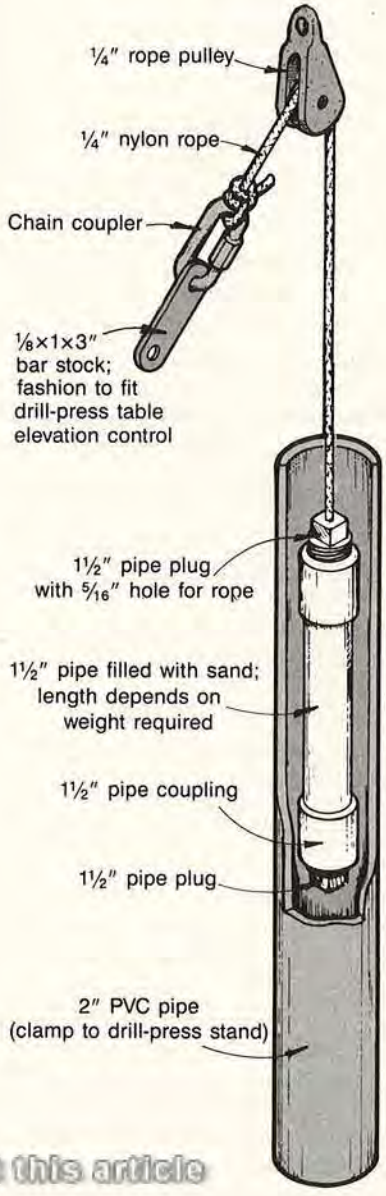
¼″ rope pulley
¼″ nylon rope
Chain coupler
⅛×1×3″ bar stock; fashion to fit drill-press table elevation control
1½″ pipe plug with 5/16″ hole for rope
1½″ pipe filled with sand; length depends on weight required
1½″ pipe coupling
1½″ pipe plug
2″ PVC pipe (clamp to drill-press stand)

the rope to prevent it from unraveling. Thread the plug into the coupling.

2 The counterweight slides up and down inside a length of 2″-diameter PVC pipe. How you mount this guide pipe varies with the drill-press type. We mounted ours to our tabletop drill-press stand using just two U-bolts.

If you have a floor-model drill press, you'll need to make two spacer blocks out of ¾″ scrap stock to separate the pipe from the post. (See the sketch, *bottom right,* for how this setup looks.) If it's ever necessary to lower the drill press table beyond these brackets, simply loosen the clamps and lower the guide pipe.

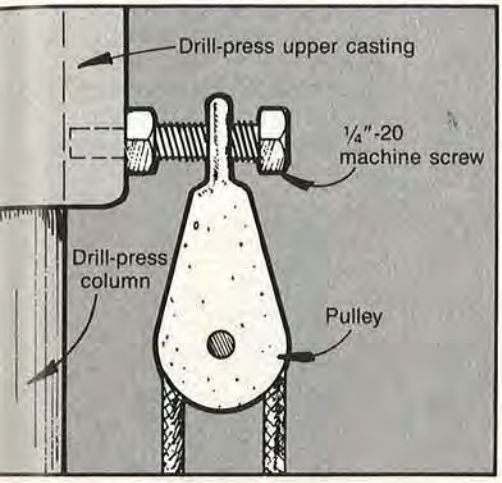

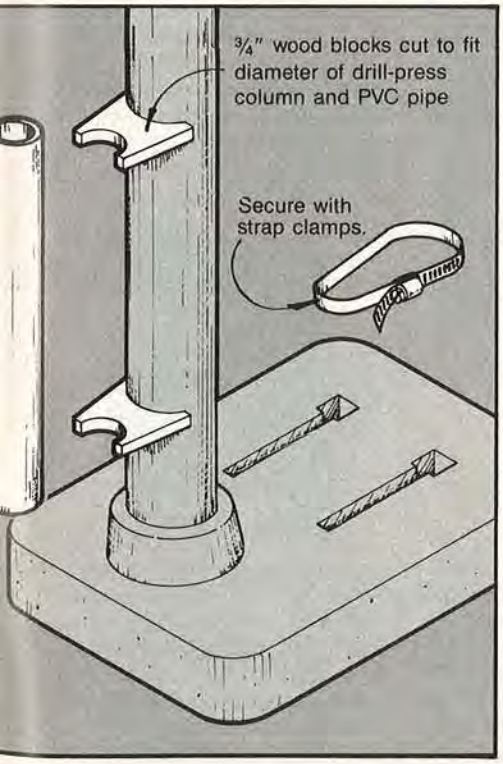

3 The pulley plays an important part in the smooth operation of any counterweight system. We mounted a pulley on the back of the drill-press casting. To do this, drill a $^{13}/_{64}$″-diameter hole in the center of the casting, and tap it for a ¼″-20 thread. Mount a ¾″ pulley with a ¼″-20×1″-long machine screw and nut (see sketch).

If you do not have a tap, you can drill the hole as described above, then use a ¼″-diameter×1″-long self-tapping screw.

Some drill presses have a motor mount adjustment screw to which you can mount a pulley. As with the guide pipe, develop the best solution for *your* drill press.

4 To attach the ¼″ nylon rope to the table, you'll need to first drill a $^{5}/_{16}$″-diameter hole through one end of a piece of ⅛″ bar stock. Locate a ½″ hole on the other end of the strip by removing the table clamping bolt on the back of the table and sliding the stock into the slot. Mark the location of the hole on the stock, then remove it and drill the hole.

Reinstall the clamping bolt, with the stock in the slot. (If the strip is too thick, the table will not clamp securely. You may have to grind the stock to thin it down.) Connect a $^{5}/_{16}$″ chain coupler (quick-link) to the metal strip.

5 If you have a bench top model drill press, drill a ½″ hole through the bench top (directly over the PVC guide pipe) to allow the nylon rope to pass through. Fit the hole with a rubber grommet.

6 To hook up the system, put the counterweight in the guide pipe. Next, thread the rope through the pulley on the back of the drill-press casting. Finally, raise the table as far as it'll go, and thread the rope through the chain coupler that's fastened to the bar stock. Tie a knot securely in the rope, then lightly singe the end to keep it from unraveling.

Have a problem with your subscription?

We want to solve it to your complete satisfaction, and we want to do it fast. Please write to: Robert Austin, *Better Homes and Gardens® WOOD,* P.O. Box 10628, Des Moines, Iowa 50336.

You can help us by attaching your magazine label here, or copy your name and address as it appears on your label. Send this along with your correspondence.

Name
Address
Apt. #
City
State
Zip

Moving?

Simply attach the mailing label from this magazine and write in your new address below. (Please allow 4-8 weeks.)

Your New Address Goes Here

Name

Address Apt. #

City

State Zip

Subscription Rate:

6 issues — 1 year — $18. Add $6 for Canadian or foreign postage.

☐ Renewal ☐ New Order

For Fast Service...

...it is better to write us concerning your problem and include the magazine label. Also, address changes are handled more efficiently by mail. However, should you need to reach us quickly the following toll-free number is available:

800-247-2504

Better Homes and Gardens®

WOOD

P.O. Box 10628 • Des Moines, Iowa 50336

WOOD Catalog Review

Mail order catalogs offer a wide variety of merchandise and many one-of-a-kind items. Shop in the comfort of your own home and order with complete confidence. Your satisfaction is guaranteed.

BRATTON MACHINERY

1. 50+ pages of woodworking machinery, portable power tools and supplies. Information on equipment for professional and home shop needs. Name brands and imported materials. Bratton Machinery and Supply, Inc. $4.50.

5. Excellence in sharpening equipment. Foley-Belsaw catalogue, complete with information on its line of equipment used for sharpening home, garden and industrial shop saws and tools. Each machine is fully illustrated; complete specs and pricing information are provided. Free.

9. Tools On Sale—a division of Seven Corners Ace hardware Inc. offers a catalog featuring the most competitive prices and one of the most complete selections of power tools from the most respected manufacturers in the industry. Seven Corners Ace Hardware Inc. Free.

2. This 84-page catalog features specifics on Porter-Cable's full line of professional quality tools and accessories. From their innovative, new abrasive plane to their anti-kick circular saw, you'll see Porter-Cable's commitment to quality and safety. Send for catalog $1.00.

6. Cherry Tree Toys' new color catalog is chock-full of projects and supplies for toymakers and woodworkers. Included are toy plans, kits and hundreds of hardwood parts for toys, crafts and furniture—plus tools and new, non-toxic finishes. Bulk prices available. Catalog subscription $1.00.

10. R.A. Ness & Co., The Woodworkers Emporium, offers a two-year, eight-issue catalog subscription. Thousands of industrial quality items—machinery, hand tools, portable electric tools and supplies featured at super sale prices. Fee refundable with purchase. $4.00.

3. Garrett Wade 1986 Woodworking Tools Catalog. The finest in hand tools, finishing supplies and machinery. Gathered from all over the world. Hundreds of books filled with tips and information. 228 pages. $3.00.

7. Solid wood clock kits. Full-color catalog of beautiful, easy-to-make clocks. Grandfather, mantel and wall clocks. All solid wood with solid brass pre-assembled movements. All parts hand-cut for perfect assembly even by beginners. Viking Clock Co. Catalog 50¢.

11. Tool catalog—bandsaw, lathe, jointer/planer/shaper, table saw, dust extractor. Your partner in precision woodworking offers a complete line of equipment from Germany at competitive prices. Elektra Beckum USA Corp. $2.00.

4. Beautiful wood finishing with Watco Danish oil wood finish. Full-color "How to Beautifully Finish Wood" booklet enables anyone to create professional finishes the first time. Outlasts surface coats three to one. Eight colors. Eliminates pre-staining. Free.

8. Catalog containing hundreds of patterns for woodworkers! Choose outdoor projects, children's toys, furniture, whirligigs, planters, clocks, rocking horses and much more. Plus many pages of books, hardware, parts, tools, supplies. $.25 for postage, please.

12. Renovator's Supply, America's Number One source for elegant, old-style reproductions at factory-direct prices! 48 colorful pages of door, window and cabinet hardware; lighting and bathroom fixtures; and gifts for the home in brass, oak, porcelain and wrought iron. $2.00.

13. Quartz clock movements. Our 60-page catalog features a large selection of movements and a full line of clock-making supplies and accessories. Thousands of ultra-thin pendulum and chime movements always in stock. Most orders shipped within 48 hours. Precision Movement. Catalog free.

14. Catalog of wooden toy patterns, hardwood turnings, complete kits; also patterns plus turnings kits and woodworking books. Seven full-sized patterns $5 each; four or more for only $4 each. Package of eight spoked wheels $5.95. Catalog free with order. Catalog alone $1.50. Toy Designs.

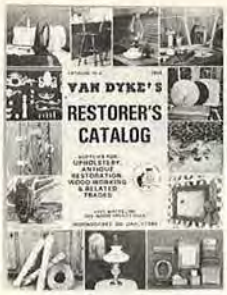

15. The Van Dyke's Restorers Catalog offers wholesale tools and supplies for upholstery, antique restoration and related trades. Includes wood products, carvings, caning supplies, brass fixtures, Aladdin lamps, lamp parts and more, $1.00.

16. 50th Anniversary Cane & Basket Supply Catalog includes hundreds of items used by hobbyists interested in basketry, caning and rushing. Many products in the 20-page catalog show all sizes available, so selection is quick and easy. $1.00 refundable with first order.

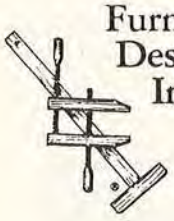

17. Wonderland for woodworkers! Illustrations and descriptions of over 180 full-size plans of fine, museum-quality furniture. Includes cradles, roll-top desk, tables, chairs, buffets, chests, gun cabinets, poker table, children's furniture, rocking horse, spinning wheels and more. Catalog $2.00-refundable with first plan order.

18. Woodworkers catalog. More than a catalog—it's one of the best sources for quality woodworking tools. You'll find everything from bit braces to wood borers, from saws to sharpening stones. Every product is sold satisfaction guaranteed. Catalog is free. Woodcraft Supply Corp.

19. Horton Brasses catalog shows over 500 items of authentic reproduction hardware from the 1700s and on into this century. These are superior reproductions of Chippendale, Hepplewhite, Queen Anne, Sheraton, Victorian and early 1900s brass furniture hardware. Catalog $2.00.

20. Workshop Blueprint's project plans for woodworkers. Professionally designed projects include furniture, playthings and accessories, storage sheds and gazebos. Plans use readily available materials and standard sizes of lumber. Instructions are clear and concise. Send $2.00 for our catalog (refundable with order) and get started!

21. 116-page catalog offers the finest in cabinet-grade hardwoods, veneers, woodworking tools and accessories, hard-to-find hardware, inlays, kits, cane, moulding, wood finishes, books, plans and more. Your best source book and reference guide for woodworkers and restorers. Satisfaction guaranteed. Prompt deliveries. $1.00.

22. Best country furniture plans. Our catalog features designs from country pie safe to mini-barn. We have also included various specialty products for the home workshopper. Send $1.00 for our latest catalog, deducted from your first plans order. Hammermark Associates.

23. Woodworks offers low prices and fast service on hundreds of beautifully turned birch, walnut, oak and cherry wood parts. Our 32-page catalog also includes hard-to-find hardware and cutting tools. Send $1.00 for catalog, bonus coupon and our special "get acquainted" offer.

24. A 1986 Pitsco Catalog can be yours! "Neat stuff!" The most frequently heard comment about our products. Peg... is only one of approximately 3,500 items in our catalog. $4.00.

WOOD Catalog Review

25. Wooden parts and turnings in bulk lots including gloved dowels, spindles, toy "headlights," wheels, eggs and train smokestacks. Items can be combined for the best price. 25¢.

26. Cas-Ker's 55-page catalog shows over 25 different varieties of quartz clock movements. Features movements made in Japan by the world's largest producer of quartz timepieces. Also included are dials, hands, numerals and accessories. Most orders are shipped within one day of receipt. $1.50.

27. Wyndham Woods is a supplier of the highest quality domestic and exotic lumber and veneer. Our specialties are: flitch-cut lumber (wide boards cut from the same tree), unusually figured and colored veneers, thick domestic veneers and thin lumber. $1.00.

28. Nyle Corporation, the only US manufacturer of small dehumidification lumber dryers offers an "Introduction to Dehumidification Lumber Drying." Nyle brings years of building large dry kiln systems to a new line of dryers for 300-10,000 board feet. Free catalog.

29. German steel tool catalog—32 pages packed with finest quality tools manufactured in Germany. Included are thousands of unusual and hard-to-find chisels, gouges, parting tools, etc.—all hardened and tempered to hold a keen edge and give a lifetime of dependable service. Frank Mittermeier, Inc. Free.

30. The revolutionary Paralok table saw fence makes cutting at least seven times more accurate and much faster. Single-handed operation works on the same principle as a drafting table, fence is always parallel to blade. Adjustable at intervals of 1/64 inch. Send for more information. Quintec Marketing. $1.00.

31. 256 pages of power and hand tools from leading manufacturers like Milwaukee, Hitachi, Porter-Cable, Bosch, Ryobi and many more can be found in Tool City's 1986 catalog. Examples of our low prices can be found in our advertisement in this issue. For catalog send $2.50.

32. Dakota Woodworks is the country's largest manufacturer of antique reproduction wooden telephones. Kits in two skill levels: one with plans and hardware, one with pre-cut oak cabinetry and hardware. Both include solid brass hardware, solid-state electronics package and instructions. Dakota Woodworks. Catalog $1.00.

WOOD'S Catalog Review ORDER FORM

Circle the catalogs you want. Fill out the coupon and include your check made out to Better Homes and Gardens® for the cost of the catalogs you ordered plus the $2 handling fee. Please allow 4-6 weeks for delivery.

Circle the catalogs you want to receive:

1. $4.50 **4.** FREE **7.** $ .50 **10.** $4.00 **13.** FREE **16.** $1.00 **19.** $2.00 **22.** $1.00 **25.** $. 25 **28.** FREE **31.** $2.50
2. $1.00 **5.** FREE **8.** $. 25 **11.** $2.00 **14.** $1.50 **17.** $2.00 **20.** $2.00 **23.** $1.00 **26.** $1.50 **29.** FREE **32.** 1.00
3. $3.00 **6.** $1.00 **9.** FREE **12.** $2.00 **15.** $1.00 **18.** FREE **21.** $1.00 **24.** $4.00 **27.** $1.00 **30.** $1.00

Send to: Better Homes and Gardens®, WOOD, Aug. 1986, P.O. Box 2051, Clinton, Iowa 52732

I am enclosing:
$ _____ for catalogs
$ **$2.00** for handling
$ _____ total payment

Name _____
Address _____
City _____ State _____ Zip _____

SOUND ADVICE

Print this article

7 COMMANDMENTS for a clean shop

A messy shop not only gets disheartening—it's expensive when you consider the cost of replacing an uncovered can of contact cement, or buying a new drill bit for the one lost in the sawdust. Follow our seven commandments to clean up your shop and keep it that way.

1 Use it and put it away. After completing that bit of mortising and chiseling, put the mallet and chisel back where they belong. Messes thrive on workbenches. Don't leave a tool out after you've used it. Sure, you're probably itching to start the next phase of the project, but the few seconds it takes to return a tool are well spent.

2 Save just so much. If you're like us, you just *hate* to throw anything away—be it a scrap of unused sandpaper or a sliver of walnut. But you have room for only so much. Boxes and boxes of scrapwood are not only a nuisance and a fire hazard, they can literally become stumbling blocks. Be ruthlessly practical: Will you really ever use that scrap for a project? If not, give it the heave-ho.

3 Hang 'em up. Having adequate shelving, pegboard, and lumber and tool racks means that your tools are less likely to end up on the bench when the job is done. Each tool, whether it be an iddy-bitty scratch awl or belt sander, should have a specific storage place. Chisels and plane irons are also less likely to have their cutting edges damaged if properly stored. Tools, like people, need a home (and you thought they didn't have feelings).

4 Buy—and use—those handy cleanup helpers: bench brushes, brooms, dust pans, and more expensive items, such as a dust-collection system. And what's handier than moving that sawdust from those hard-to-get-at places than an air compressor (see *WOOD,* April, 1985, p. 50)?

5 Organize small items. Almost every hardware store carries those organizers with small plastic pullout drawers. These are great for storing wood screws and dowel pins, and they also make it easier to quickly locate small items when you need them.

6 Stop sawdust in its tracks. Using tools, especially sanders, with dust bags traps most of the particles before they have a chance to become airborne. Dust in the air not only means unhealthy breathing conditions, it can also settle in motors and bearings and shorten their lives. A high-powered vacuum cleaner can make clean-up bearable and even fun. Placing vacuum-hose adapters on your stationary tools also helps to eliminate sawdust.

7 Hit the broom, then the lights. A quick sweep across the workbench with a bench brush and a few passes with a push broom are usually all it takes for a shop worth walking into tomorrow.

DELTA 10" Contractor's Saw for $599. You Can't Get More Value In A Table Saw Than This.

Delta's 10" Contractor's Saw has a powerful 1½ HP motor, full 3⅛" depth of cut, large massive table, exclusive Jet-Lock, Micro-Set® rip fence, 25" rip capacity and, of course, the smooth and easy operation you expect from all Delta Machines.

At 265 pounds, this saw is not like most other open-stand table saws. It is a massive precision tool. The complete package includes the saw, a steel combination blade, miter-gauge, stand and motor. We have added a **FREE** adjustable dado and table insert to give you added flexibility.

Our price includes freight to anywhere in the 48 states.

You get a $100 rebate directly from Delta

33-410S Delta 10" Contractor's Saw with **FREE** adjustable dado and table insert

List $1,128.86 SALE $699.00

Your cost after rebate $599.00

Woodworker's Supply
OF NEW MEXICO
5604 Alameda, NE • Dept., Wood
Albuquerque, NM 87113
Toll-Free: 1-800-645-9292 VISA/MC

DO-IT-YOURSELF KITS

BUILD YOUR OWN GRANDFATHER CLOCK

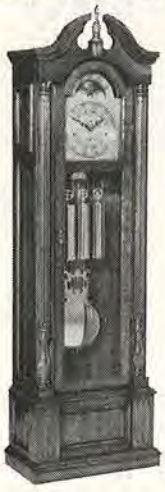

Prices Starting Under **$280**
(including movement and dial)

- Do-it-yourself case kit, parts pre-cut
- Finished clocks
- Solid 3/4" hardwoods: black walnut, cherry, oak
- Heirloom quality
- Factory direct prices
- Solid brass West German chiming movements
- Money back guarantee
- Prompt shipment
- No woodworking experience necessary

WRITE FOR FREE COLOR CATALOG

EMPEROR® CLOCK COMPANY
WORLD'S LARGEST MANUFACTURER OF GRANDFATHER CLOCKS
Dept. 2007, Emperor Industrial Park
Fairhope, Alabama 36532 · Phone 1-205-928-2316

I am interested in ☐ Do-It-Yourself Kits ☐ Finished Clocks

Name _____
Street _____
City _____
State _____ Zip _____
(please print)

Information

Print this article

WORTH WRITING FOR

You can get useful ideas and product information by mail. Use the coupon in this section to order your choice of literature listed below.

SCROLL SAW AND LATHE INFORMATION — More than 20 pages of information, including full-color photos, on HEGNER precision scroll saws, HEGNER lathes, and HEGNER duplicators. Find out why these machines are considered state of the art, and what to look for when shopping for scroll saws or lathes. AMI, LTD. $1.00. *Circle No. 2.*

WOODWORKING PROFESSIONALS ONLY — Now save 50% on machinery, 70% on operating costs! How? By using the world's finest production quality universal machine. Commercial durability, utmost precision, set-up in seconds. No other tool combines usable capabilities like FELDER. Thousands sold all over the world. Now available in America through AMI. Send for brochure. AMI LTD. $1.00. *Circle No. 3.*

OVER 400 WOODWORKING DESIGNS — We now offer thirty-one packets of blueprint plans and full-size patterns with both the home and commercial craftsman in mind. Enjoy making toys, games, children's items, whirligigs, folk art, plaques, magazine racks, shelves, kitchen and household items, birdhouses, plant stands, and more. Simple enough for the beginner, fun and profitable for the pro. Send for illustrated brochure plus sample pattern. ACCENTS IN PINE. $2.00. *Circle No. 12.*

THE AMERICAN WOODWORKER MAGAZINE — offers projects on beginning, intermediate, and advanced levels in each issue. Also included are in-depth instructional articles on all phases of woodworking, plus general interest articles. We will offer plans for jigs and fixtures for your shop. A one year subscription is only $12.00 (inside U.S.). Send for our brochure giving complete details plus information on the new tool buyer's guide for woodworkers. THE AMERICAN WOODWORKER. $1.00. *Circle No. 45.*

TOOL CATALOG — Available from Anglo American Enterprises, the world famous Recod Marples Tool Catalog featuring the finest woodcrafting tools available. Send for catalog and price list. ANGLO AMERICAN ENTERPRISES CORP. $2.00. *Circle No. 50.*

WOODWORKERS' PLANS AND SUPPLIES — Wood projects are simplified with the high quality plans, specialty hardware and other supplies offered by Armor Products. Over 100 plans are available for making toys, desks, clocks, pool tables, lamps, chests, and other furniture. Movements, dials, moldings, ornaments, and hardware also available. ARMOR PRODUCTS. $1.00. *Circle No. 60.*

WOOD ENTHUSIASTS — Our catalog is loaded with products. Select domestic, exotic, and dyed veneers, inlays, marquetry patterns and kits, game boards, picture faces, carving sets, clock kits, veneering tools, power tools, glues, finishes, "how-to" books, sculpture kits, ducks, birdhouses, furniture plans, and more. Send for our woodworker's catalog. Price of the catalog is deducted from your first order. ARTISTRY IN VENEERS, INC. $1.00. *Circle No. 65.*

DISCOVER VENEER — Artistry in Veneers' do-it-yourself guide to veneering shows you how simple it is to master this craft. Our color brochure identifies the most popular species of veneer and educates you on veneer matching, taping, and gluing. Send for your introductory brochure. ARTISTRY IN VENEERS, INC. 50¢. *Circle No. 66.*

THE FIRST LINE IN JIG SAW — BOSCH — Bosch gives professionals a selection of top-of-the-line jig saws as well as an impressive selection of blades. Wholesale prices. Send for literature. AVIATION INDUSTRIAL SUPPLY. 50¢. *Circle No. 85.*

EVERYTHING FOR THE WOODWORKER — Makita, Hitachi, and Black and Decker power tools at well below list prices. Plus a wide selection of woodworking supplies, including candle cups and shaker pegs. Price of catalog is refundable with order. BENNY'S WOODWORKS. $2.00. *Circle No. 115.*

WOODWORKING EQUIPMENT — More than 75 pages filled with woodworking machinery, portable power tools, and supplies. Detailed information on all types of equipment for professional and home shop needs. Powermatic, Rockwell, Hitachi, Makita, and more. BRATTON MACHINERY AND SUPPLY, INC. $4.50. *Circle No. 150.*

CANE AND BASKET SUPPLIES — Every item used in caning and basketry is pictured in this new catalog for hobbyists and others interested in caning, rushing, etc., for either fun or profit. CANE & BASKET SUPPLY CO. $1.00. *Circle No. 230.*

CARBIDE TIPPED ROUTER BITS AND SHAPER CUTTERS — Over 200 router bits and shaper cutters displayed in catalog featuring 6 piece cabinet sets, 3 piece ½ in.shank router bit panel raising system, and 3 wing industrial shaper cutters. Shaper cutters available in ½ in. through 1-¼ in. bore with bushings. Router bits offered in ¼ in. and ½ in. shank. CASCADE PRECISION TOOL CO. $1.00. *Circle No. 245.*

CLOCK MOVEMENTS CATALOG — The 55-page catalog contains over fifteen different quartz clock movements, including pendulum, strike, and chime movements. Also shown are dials, hands, numerals, and accessories. It features movements made in Japan by the world's largest producer of quartz timepieces. CAS-KER CO. $1.00. *Circle No. 250.*

NO MORE COFFEE CAN CATCHALLS — An end to frustrating searches for the right parts. Our workbench organizers come empty or full of the most needed woodworking or toymaking parts. Constructed of hardwood with heavy-duty corrugated bins and adjustable dividers. Also illustrated in our beautiful color catalog are hundreds of plans, kits, parts, and supplies for toy, wood, and furniture projects. CHERRY TREE TOYS, INC. $1.00. *Circle No. 258.*

MAKE WOODEN CLAMPS AND SAVE 60% — Kits and plans for 8, 10, and 12 in. wooden handscrew clamps. Acme threaded steel rods, components, handles and full-sized plans provided. Kits also available with uncut and precut maple jaws. You decide how much you want to save. Also available in our beautiful color catalog are hundreds of plans, kits, parts, and supplies for toy, wood, and furniture projects. CHERRY TREE TOYS, INC. $1.00. *Circle No. 259.*

MAKE WOODEN TOYS AND PROJECTS — Hundreds of plans, kits, colored and unfinished hardwood parts for all types of toy, craft, and furniture projects (Colonial, Shaker, Primitive, and Modern). Also available: tools, wood, finishes, and supplies. For novice to experienced woodworkers. Bulk prices available. Send for beautiful color catalog subscription. CHERRY TREE TOYS, INC. $1.00. *Circle No. 260.*

WOODWORKERS TOOLS AND MATERIALS — 116-page catalog offers fine hardwoods, veneers, inlays, picture molding, wood finishes, carving blocks, cabinet hardware, and cane. Specialty woodworking tools, shop equipment, plans, instruction books. ALBERT CONSTANTINE AND SON INC. $1.00. *Circle No. 270.*

LOOKING FOR PIERCED TIN? COME TO THE SOURCE! — A 96+ page catalog plus color brochure introduces you to a treasury of pierced metal panels ready to install in kitchen cabinets, cupboards, piesafes, and other projects. Available in a large variety of sizes, 16 different finishes, over 150 patterns — or all the materials you need to create-it-yourself. Tin, zinc, copper, brass, kits, lanterns, furniture plans, and more! Artistry in pieced tin. COUNTRY ACCENTS. $3.00. *Circle No. 272.*

WOODWORKERS! HELP CELEBRATE OUR 55TH YEAR OF SERVICE — Send for our new 148-page Craftsman 1985 catalog. 42 varieties of choice hardwoods 1/64- in. to 4-in. thickness. Fine hardwood veneers, tools, moldings, trim, marquetry inlays, upholstery and lamp supplies, finishes, clock kits, and hard-to-find hardware. 4,000-plus items for your projects. CRAFTSMAN WOOD SERVICE CO. $1.00. *Circle No. 275.*

WOODWORKERS FULL-LINE CATALOG — 152 pages of fine woodworking and carving tools; ¼ in. thick to 4 in. thick hardwoods, veneers, plywood, hardware, wood finishes, decoy carving supplies. Complete full-line catalog. CRAFTWOODS. $3.00. *Circle No. 285.*

INDUSTRIAL QUALITY CUTTING TOOLS — DML offers 1,002 different cutting tools, each engineered for a specific task, all made in America. Four information-filled brochures detail carbide-tipped saw blades, bits, and cutters: concise copy explains applications, photos show tool configurations, and charts list sizes. DML, INC. $1.00. *Circle No. 303.*

INDUSTRIAL QUALITY CUTTING TOOLS — Three large, colorful wall posters keep DML's huge line of carbide-tipped cutting tools close at hand for easy reference. Separate posters for saw blades, shaper heads (with diagrams of each cut), and router bits. Each features graphic displays of the tools, capabilities, and sizes. DML, INC. $3.00. *Circle No. 304.*

ANTIQUE REPRODUCTION WOODEN TELEPHONES — Dakota Woodworks is the country's largest manufacturer of antique reproduction wooden telephones. Kits available in two skill levels, one with plans and hardware, one with pre-cut oak cabinetry and hardware. All hardware is solid brass. Both kits include complete solid-state electronics package and detailed instructions. Send for four-color 12-page catalog. DAKOTA WOODWORKS. $2.00. *Circle No. 308.*

DELTA MACHINERY CATALOG FOR BUILDING TRADES AND HOME SHOPS — a source for quality wood and metalworking machinery for the do-it-yourselfer and professional craftsman. A complete line of saws, drill presses, grinders, jointers, lathes, shapers and accessories. Send for 44-page catalog. DELTA INTERNATIONAL MACHINERY CORP. Free. *Circle No. 317.*

BUILD IT YOURSELF — Why buy it when you can build it? Illustrated catalog of hundreds of interesting and fun items you can create yourself for personal use or profitable sale. Our 1986 catalog contains toys, games, plaques, puzzles, birdhouses, planters, accent furniture, and much more. All patterns are full-size blueprints — no enlarging is necessary. Simply trace and create. DESIGN GROUP. $1.00. *Circle No. 320.*

TREMENDOUS SAVINGS — on finest quality tools, supplies, and accessories. Ryobi power tools, Everlast saw blades, Velepec router bits, Stanley hand tools, and more. Every item we sell is unconditionally guaranteed. DUSTY SPLINTERS ENT. $1.00. *Circle No. 350.*

MULTI-PURPOSE HOME WOODWORKING SYSTEM - The Emco Start-2000 is a table saw, band saw, moulding machine and disc sander and you can change operations in less than 30 seconds. One big 2 hp. motor does it all. With optional accessories you can do wood turning, mortising, horizontal drilling, and more. Send for four-color information. EMCO* USA. Free. *Circle No. 402.*

EdLco — STAY IN THE WOODS WITH US — Educational Lumber Company is pleased to offer you our new catalog, stacked with excellent buys at

TO ORDER THESE BOOKLETS, USE COUPON ON PAGE 99

WOODWORKING PATTERNS

Timbers catalog has hundreds of projects to make your woodworking easier and more fun. It shows designs for wooden toys, furniture, bird houses, gifts, whirligigs, clocks, planters and much more. There are pages of supplies like wood parts, brass hardware and tools, too! Build a project you can be proud of! Timbers catalog is $1.

Timbers, Lake Tahoe
Dept. T7, Carnelian Bay, CA 95711-0850

---

101 GIFT & NOVELTY PATTERNS

This wonderful packet contains 101 FULL SIZE PATTERNS of Gifts, Novelties, Lawn Figures, Bird Houses, Shelves, Action Windmills, Alphabets, and many more things. Just trace and saw out. Plus "Make Money Jig Sawing". Only $7.00 Prepaid 1st Class for this big packet.

MASTERCRAFT PLANS WEST, DEPT 75
P.O. Box 625, Redmond, WA 98073

DONKEY FLOWER CART
LARGE TOOL HOUSE • MARTIN HOUSE

Plans and patterns for making 6 matched pcs. of PATIO FURNITURE, DONKEY FLOWER CART, SWISS CHALET MARTIN HOUSE, and 4x7x8 ft. TOOL HOUSE. All easily made projects, complete with directions. Only $7 Prepaid 1st Class.

MASTERCRAFT PLANS WEST, Dept. 721
PO Box 625, Redmond, WA 98073

THE MAGNIFICENT MALLET

- 14-oz... $7.50
- 18-oz... $7.50
- 24-oz... $7.95
- 32-oz... $7.95

+$2.25 Pstge.

Top Quality • Extra Durable • One-Piece Lignum Vitae Carver's Mallet
Liberal discount to Schools and Dealers.
FREE 24-P. German steel tool catalog-write:
FRANK MITTERMEIER, INC.
IMPORTERS OF FINE TOOLS SINCE 1936
Dept. WM-607, 3577 E. Tremont Avenue
Bronx, New York 10465

NEW! AFFORDABLE 24" KIT SCROLL SAW

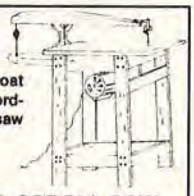

FINALLY — At last a 24" throat precision scroll saw that is affordable to any woodworker — saw complete or kit form.

PEDAL SCROLL SAW

Beautiful all cast-aluminum reproduction of the time proven Velocipede No. 2 Scroll Saw. Great attraction when working craft shows. Total speed control. 24" throat can cut material modern scroll saws can't.
Write or call—

Mo. res. add 5.625% sales tax

THE TOOL COMPANY
1306 S. Commercial
P.O. Box 629, Dept. BHG-10
Harrisonville, MO 64701
(816) 884-2679

Brand Your Work

Personalize your wood and leather products or handicrafts with the easy to use Craftmark™ Branding Tool. Choose from four branding marks: **Logo • Maker's • Owner's • Custom**

For more information write:
Wall Lenk Corporation Dept. W76
P.O. Box 3349, Kinston, North Carolina 28502-3349

EDLCO

Appalachian Hardwood Specialists
Now Serving Craftsmen
Select from over 21 species
Imported And Domestic Hardwoods
Softwoods
Veneers Shorts Turnings
Kiln Dried Delivered Prices
New Catalogue $2.00
Write today EDLCO
Box 5373 W
Asheville, N.C. 28813
Phone (704) 255-8765
Stay In The Woods With Us

EDUCATIONAL LUMBER CO., INC.

SWINGING CRADLE

EASY TO MAKE WITH

Full-Size Plan

Authentic spindle design straight out of Colonial America. Plans show alternate construction with panel sides. Perfect for baby or use for magazines. Size: 20" x 39" x 30" high.
Order plan #166 . . . $9.00

CATALOG
180 diff., full-size prof. furniture plans—$2.00
(catalog free with order)

FURNITURE DESIGNS, Dept. BS-76
1827 Elmdale Ave., Glenview, IL 60025

FREE Tool Catalog

Quality Products For Woodworkers

Send today for your FREE copy of our new colorful catalog. It's fully illustrated with the finest quality tools, supplies, books, components, hardware, and much more. **Satisfaction Guaranteed.**
Write today for your FREE catalog.

WOODCRAFT SUPPLY CORP.
Dept. WBH76
41 Atlantic Avenue, Box 4000
Woburn, Massachusetts 01888

LIKE OWNING YOUR OWN LUMBER-YARD!

FREE 30-DAY TRIAL

NEW SOLID STATE ELECTRONIC CONTROLS!
Just a twist of the dial gives you from 70 to over 1,000 cuts-per-inch!
Made in U.S.A.

Makes you money... saves you money!

New 4-in-1 power-feed shop planes, molds, joints, sands! Quickly converts low-cost rough lumber into high-value finished stock! Turns out perfect picture frame, quarter-round, casing, tongue & groove...all popular patterns...any custom design. Planes or joints without change-over. Converts in just minutes to a powerfeed drum sanding machine! This one low-cost power-feed shop opens up a truly astonishing range of products you can make and sell. Find out how you can try this versatile tool in your own shop on our 30-day Free Trial! **Easy terms.**

PHONE TOLL-FREE 1-800-251-4888, ext. 2313

SEND FOR FREE FACTS TODAY

Woodmaster Tools, Inc.
Dept. PW13, 2908 Oak
Kansas City, MO 64108

☐ **YES!** Please rush my FREE Information Kit and details on your 30-Day Free Trial Guarantee.

Name _____
Address _____
City/State _____ Zip _____

BOSCH Power Tools

Jig saws only $126.00

Model 1581VS

NO.	TOOL	SALE
1582VS	Orbit. Action Nob Hdle Jig Saw	$118.00
3238VS	Unv. Shank Mult. Orbit. Jig Saw	83.00
1601	1 hp Router	104.00
1602	1½ hp Router	129.00
1604	1¾ hp Router	110.00
1606	D-Handle, 1¾ hp Router	163.00
90300	Fixed Base Router, 3¼ hp	350.00
90303	Plunge Base Router, 3½ hp	472.50
90085	¾ hp Router	91.00
3270D	3x21 Dustless Belt Sander	122.00
1272	3"x24" Belt Sander	159.00
1272D	3"x24" Belt Sander w/Dust Collector	169.00
1273	4"x24" Belt Sander	169.00
1273D	4"x24" Belt Sander w/Dust Collector	179.00
1921VSRK	3/8" Var. Spd. Screwdriver	$129.00
1920VSRK	3/8" Cordless Reversing Drill	99.00
1920RK	3/8" Cordless Reversing Drill	85.00
3268	Heat Gun	48.00
1158VSR	3/8" Var. Spd. Rev. Drill	54.00
1651	New Bosch 7¼" Cir. Saw, 13 amp	99.00

HITACHI

F1000A	Planer Jointer	1275.00

CALL TOLL FREE 1-800-525-0750
In Colorado 1-800-523-6285
Denver 355-2391

AVIATION/INDUSTRIAL SUPPLY
P.O. Box 39159 • Denver, CO 80238
TOOLS FREIGHT PAID

Elmer's Build-A-Memory Series.

BORDEN

IF YOU WANT TO BUILD LASTING MEMORIES, ELMER'S WILL SEND YOU THE PLANS.

Build a saltbox doll house. A child's table. Or winged-back chair.

Elmer's® has some special plans for that someone special. With easy-to-follow instructions for a child's doll house, table, and chair in authentic colonial designs. And because they're made with Elmer's® Carpenter's Wood Glue, you know you'll get professional results every time. Just send the UPC code number from either Elmer's Carpenter's Wood Glue or Elmer's Carpenter's Wood Filler, and we'll send you the plans for $3.00 each. So for years of lasting memories, go with the lasting name in glue. Elmer's.

(20"x19"x32")

(31"x14"x14")

Please specify plans (doll house, table, chair) and send check or money order and UPC code number to: Elmer's Plans Offer, P.O. Box 2383, Van Nuys, CA 91409-2383.

© Borden Inc 1986

delivered prices. Available to you are over 21 species of imported as well as domestic hardwoods, softwoods, turnings, shorts, veneers. All our lumber is kiln dried. As school shop suppliers for 34 years, we know our lumber. It is top-grade. Send today and receive your BONUS GIFT: 4 new furniture designs. EDUCATIONAL LUMBER CO., Inc. $2.00. *Circle No. 420.*

MACASSAR EBONY — Professionals agree it's one of the world's hardest, rarest, and most beautiful woods. Macassar is coveted by woodworkers, artists, turners, and connoisseurs for its marbelike beauty and durability. We have the largest commercial selection of dimentional stocks in the U.S., from 1 to 8 inches thick and from 4 to 20 inches wide in random lengths to 9 ft. These are virtually unavailable elsewhere at any price. As a direct importer, we offer the lowest prices anywhere with no minimum orders. Send today for a complete description, inventory and price list (refundable with first order). ART EISENBRAND, INC. $1.00. *Circle No. 430.*

STATIONARY POWER MACHINES — Available from Elektra Beckum U.S.A. Corp. — advanced technology woodworking stationary power machines with the unique Unimex Motor interchangeable concept. For complete information on Jointer/Planer, Bandsaw, Dust Extractor, Spindle/Moulder, Lathe and Combi Saw send for our catalog. ELEKTRA BECKUM U.S.A. CORP. $1.00. *Circle No. 440.*

DO-IT-YOURSELF GRANDFATHER CLOCK KITS — Direct from world's largest manufacturer of grandfather clock kits. Prices starting at under $280 including West German Westminster chiming movement. Choose from black walnut, cherry, and oak. Other quality heirloom kits also available. Send for brochure. EMPEROR CLOCK CO. 50¢. *Circle No. 450.*

JAPANESE WOODWORKING TOOLS — A fine selection, including chisels and gouges, sharpening stones, saws, marking tools, hatchets, knives and garden tools, from some of Japan's most respected small toolmakers. Send for catalog. FINE TOOL SHOPS. Free. *Circle No. 495.*

RIPSTRATE SAVES FINGERS — for table saw and radial arm saw users. Brochure describes the RIPSTRATE and shows how it gives straighter cuts, speeds, the work, prevents kickbacks, and keeps hands away from the blade. FISHER HILL PRODUCTS. 25¢. *Circle No. 530.*

EXCELLENCE IN SHARPENING EQUIPMENT — This two-color, 56-page catalog from Foley-Belsaw Co. provides information on its complete line of equipment used for sharpening home, garden, and industrial shop saws and tools. Each machine is fully illustrated, complete specs and pricing information are provided. FOLEY-BELSAW CO. Free. *Circle No. 550.*

BEAT INFLATION AND HIGH LUMBERYARD PRICES — Turn trees into valuable lumber with the world-famous ONE-MAN PORTABLE SAWMILL. Goes right to the trees — turns out smooth, truecut lumber every time. No crew needed . . . no experience necessary. Send for booklet. FOLEY-BELSAW CO. Free. *Circle No. 551.*

FREE SUBSCRIPTION TO FOLEY-BELSAW NEWS BULLETION — For a limited time Foley-Belsaw will be giving away a 1-year subscription to their 64-page color publication. This publication includes stories and shop tips on all types of woodworking, tool sharpening, upholstery, engine repair, and locksmithing. The magazine, which is published six times a year, includes many special offers on Foley-Belsaw equipment. FOLEY-BELSAW CO. Free. *Circle No. 552.*

CUTTING TOOLS — Freud provides the finest in handtools and carbide cutting tools. From chisels and planes to saw blades and router bits. All this and more. Send for catalog. FREUD. $1.00. *Circle No. 560.*

FULL-SIZE FURNITURE PLANS CATALOG — Illustrates and describes over 180 plans for making furniture of quality found in museums and fine furniture stores. Plans include rolltop desk, cradles, dining tables, chairs, buffets, chests, gun cabinets, poker table, children's furniture, rocking horse, spinning wheels, and more. Bill of materials exploded drawings assist the woodworker. FURNITURE DESIGN, INC. $2.00. *Circle No. 585.*

1985-86 MASTER CATALOG — contains 228 pages of the finest in woodworking hand tools, machinery, and finishing supplies plus over 125 books. Of particular note is the selection of Japanese tools. The format is all four-color. GARRETT WADE CO. $3.00. *Circle No. 600.*

BEAUTIFUL WIPE-ON WOOD FINISHING — is explained in a booklet from a pioneer in wipe-on finishes since 1928. Wood finishes that produce a beautiful hand-rubbed finish without messy brushes or spraying. Specially formulated finishes that simply wipe-on with professional results everytime — guaranteed! Unlike conventional finishes these will never yellow, crack, or craze and they dry dustfree without runs. These finishes will bring out the natural beauty of the wood and never needs waxing. Send today for your wood finishing guide and products catalog. GENERAL FINISHES. 25¢. *Circle No. 630.*

PEG-1000 WHOLESALE — Polyethylene glycol green wood stabilizer, 10 lbs. $19.00 plus $3.20 shipping. Send for additional information. GENERAL FINISHES. 25¢. *Circle No. 631.*

EASY DOES IT — with HTC'S power tool accessories. Discover many unique items, designed only with you, the dedicated woodworker, in mind. Make your machinery safer, increase the working area of your shop and accomplish nearly impossible tasks easily, quickly, accurately. Full-line catalog and price list. HTC PRODUCTS, INC. Free. *Circle No. 705.*

COUNTRY FURNITURE PLANS — Our catalog features 14 designs — from country pie safe to mini-barn. Also included are various products for the home workshopper. Send for our latest catalog. Price of catalog deducted from your first order. HAMMERMARK ASSOCIATES. $1.00. *Circle No. 710.*

BRASS FURNITURE HARDWARE — This 36-page catalog shows over 500 items of authentic reproduction hardware from the 1700's and on into this century. This fine quality hardware is a must for the furniture craftsman working on a new project, or the refinisher who needs replacement hardware. HORTON BRASSES. $2.00. *Circle No. 750.*

NEW 1986 CATALOG OF SHAPER CUTTER PATTERNS — For the convenience of the distributor and/or end-user, L.R.H. Enterprises, Inc. has duplicated in actual size, 600 different shaper cutter patterns in an easy-to-read catalog. This catalog is excellent for quick reference and functions as a guide for the many cutter details used in the cabinet making and furniture manufacturing industries. Catalogs include a retail price list. L. R. HUBERT SAW. $2.00. *Circle No. 765.*

IF YOU ARE INTERSTED IN FINE WOODWORKING — you will not find better machinery than that sold by J.P. Humfrey Ltd. For example, we have 10-in. general tablesaws (2 HP, magnetic switch, lever-lock fence) available at $1,295 FOB New York. Send for brochure. J. PHILIP HUMFREY LTD. $1.00. *Circle No. 770.*

START SMALL BUSINESS WITH NEW SCROLL SAW — The Excalibur precision scroll saw from Canada can turn your workshop into a profit center. Make toys and puzzles, do intricate marquetry work or detailed cabinet work with these "operator friendly" machines. Hundreds sold in the U.S. already. Save, buy direct, from $495. up. Complete project patterns and plans available. Send for brochure. J. PHILIP HUMFREY LTD. $1.00. *Circle No. 771.*

BUY YOUR SANDING BELTS DIRECT FROM THE MANUFACTURER — Industrial Abrasives is the company that gives you six free belts with every dozen ordered. But, sanding belts are not the only product we have to offer. In our catalog you will find many specialty items not readily available in your hardware store. Price of catalog refunded with first order. INDUSTRIAL ABRASIVES CO. $1.00. *Circle No. 780.*

THE CUSHION CONTOUR SANDER — is a new concept in pneumatic drum sanding. Sanding sleeves are slid over an air bag (inflated with a hand tire pump) on an arbor to mount it between centers on a wood lathe. Drum effectively takes on profiles, curves, and bevels practically eliminating flat spots and chatter marks. INDUSTRIAL ABRASIVES CO. Free. *Circle No. 781.*

PROFESSIONAL SAFETY PRODUCTS — A complete catalog of personal protective devices and work clothing available at discounted prices. Products include eye and ear protection, gloves, boots, hats, aprons, work clothing, and more. Every product is sold satisfaction guaranteed. KENCO SAFETY PRODUCTS. 25¢. *Circle No. 1023.*

AFFORDABLE INDUSTRIAL QUALITY SANDING MACHINERY — Conveyor-fed single and dual-drum thickness sanders available in four sizes, 12, 18, 24, and 36 inches. Virtually eliminates hand sanding and improves quality, precision, and finish of your work at the same time. Plus many other products to make you more productive. Illustrated catalog and brochures. KUSTER WOODWORKERS, INC. 50¢. *Circle No. 1080.*

FROM CURVES TO CORNERS, KUSTER'S OSCILLATING VERTICAL SPINDLE SANDER GETS YOUR WORK INTO SHAPE — Industrial quality and utility priced to fit the small to medium shop. Easy to use with exclusive straight shank spindles and separate oscillation and rotation motors. Large non-marring table tilts for total control of work position. Illustrated brochure and catalog. KUSTER WOODWORKERS, INC. 50¢. *Circle No. 1081.*

FREE LITERATURE — New brochure showing all *moisture meters* and accessories for moisture meters such as interchangeable electrodes and probes and cables for in-kiln moisture monitoring. Complete line of moisture meters include: Pocket-size Mini-Ligno with LED readout 6%-20%, Mini Ligno E 6%-36%, analog or digital display meters 4%-30%, 60% and a digital moisture meter with built-in compensation for different wood temperatures. LIGNOMAT USA, LTD. Free. *Circle No. 1130.*

PRODUCTION QUALITY CARBIDE TIPPED ROUTER BITS — MLCS Ltd. offers a full line of professional production quality carbide tipped router bits at 50-70% lower than retail prices. We sell through the mail and only direct to craftsmen. Send today for information. MLCS LTD. Free. *Circle No. 1210.*

WOODWORKING PLANS — Catalog of full-size plans printed on heavy paper for toys, gifts, novelties, action windmills, shelves, birdhouses, garden furniture, Dutch windmill, lawn ornaments, old-fashioned lawn swing, jigsaw projects for children, and more. MASTERCRAFT PLANS WEST. $1.00. *Circle No. 1216.*

WOODWORKING BOOKS AT DISCOUNT PRICES — Most complete listing of books for woodworkers. Each book is discounted from 10 to 25% off the cover price. There is absolutely no shipping and handling charge. Woodworking, carving, turning, project books by authors such as Krenov, Frid, Spielman, Nish, Tangerman, and Hoadley are listed along with many hard-to-find titles. MANNY'S WOODWORKER'S PLACE. $2.00. *Circle No. 1217.*

WOODWORKER'S SPECIALTIES — 48-page catalog of plans and hard-to-find hardware for the woodworker. Brass hardware, screws, cork products, wood turnings, canister liners, clock movements, picture frame supplies, lamp parts, and more. MEISEL HARDWARE SPECIALTIES. $1.00. *Circle No. 1220.*

TIPS ON WOOD FINISHING — A comprehensive, 30-page booklet includes numerous tips that save time and trouble for do-it-yourselfers. Information ranges from small repairs to restoring the finish of a priceless antique. Also included is a chart showing the full range of colors available. The name of your nearest dealer is provided. MINWAX CO., INC. Free. *Circle No. 1240.*

GERMAN STEEL TOOL CATALOG — 24 pages packed with finest quality tools manufactured in Germany. Included are thousands of unusual and hard-to-find chisels, gouges, parting tools, etc. — all hardened and tempered to hold a keen edge and give a lifetime of dependable service. FRANK MITTERMEIER, INC. Free. *Circle No. 1250.*

WOOD CARVING — You can obtain information on learning woodcarving by sending for our literature. The offer includes sample copy of *The Mallet Magazine* and two lesson sheets on carving. NATIONAL CARVERS MUSEUM. $1.00. *Circle No. 1300.*

WOODWORKING TOOL CATALOGS — R.A. Ness & Co., the Woodworkers Emporium, offers a 2-year subscription, a total of eight huge sale catalogs. Thousands of industrial quality items — machinery, hand tools, portable electric tools, and supplies — are featured at super sale prices. The fee is refundable with purchase. R. A. NESS & CO., the Woodworkers Emporium. $4.00. *Circle No. 1310.*

BANDSAW OWNERS — A new tool is now available so you can make or repair any length bandsaw blade in minutes. Our splicer enables craftsmen to make up any length blade from economical coil blade stock quickly and easily. Three models are currently available to accomodate blade widths

DML's Radi-All® & Miter-All™ cut the push and pull of overfeed.

Everyone has experienced the problem with ordinary radial arm saw and power miter box blades. They begin to feed faster than they can cut. So you fight the machinery. Your finish gets ragged. Maybe your motor bogs down, and you risk damage to your saw.

Radi-All is a breakthrough in carbide tipped radial arm saw technology. Its specially engineered hook angle reduces overfeed; its unique tooth grind makes for a

New large 3/8" long by .160 thick premium C-4 carbide on all DML blades

smooth cut through any kind of wood. So you get a comfortable feed flow and a fine finished cut every time. You need fewer regrinds. And you don't fight the equipment.

Miter-All, with its meticulously calculated hook configuration, is another revolutionary development in saw blade design. Tipped with C-4 grade carbide, specifically engineered to enter the material at exactly the right angle, Miter-All reduces tear-out. You get a clean finished cut in any species of wood. Maximum efficiency from your equipment. And longer blade life.

Radi-All, for trim, cutoff, general purpose and hand feed mitering operations on radial arm saws. And Miter-All, for cutting picture frames, molding, and all trim material. Both available from your DML distributor. To take the fight out of cutting wood.

DML

Cutting everything but corners

A SUBSIDIARY OF VA VERMONT AMERICAN CORPORATION

For details about DML's complete line of cutting tools, fill out and mail to:
DML, Inc. Dept. W
1350 S. 15th Street
Louisville, KY 40210

NAME PHONE

COMPANY NAME

ADDRESS

CITY STATE ZIP

A Finish Sander . . . A Thickness Sander

You can use this high-tolerance machine for light dimensioning as well as the finest finish work. Because stock is power-fed at a uniform rate, you'll achieve results impossible to duplicate with hand methods or hand-held sanders. Dimensions remain exact . . . no more low spots, waves or cross grain marks!

Improves Results!

Use the Woodmaster to dimension and finish-sand cabinet pieces, resawn stock, paneling, grandfather clocks, toys, tabletops, knees, burls, crotches, and much, much more! You'll soon find it's one of the most valuable tools in your shop!

30-Day FREE Trial!

Send for Complete Facts! See how you can use the Woodmaster Drum Sander in your own shop for 30 days completely without risk! Easy terms.

Call Toll-Free Today 1(800) 251-4888, ext. 2413

Woodmaster Tools, Dept. RW13, 2908 Oak Kansas City, MO 64108

☐**YES!** Please rush my FREE Information Kit and details on your 30-Day Free Trial Guarantee.

Name _____

Address _____

City _____ State _____ Zip _____

MITER SAWS!

DELTA

10" 34-080 ..... **Call For Price**
10" 33-150 Sawbuck, List $707. **$498**

BLACK & DECKER

8¼" 9425, List $179 ..... **Now $108**
9" 7715, List $234 ..... **Now $138**
10" 7718, List $229 ..... **Now $138**
10" 1703, List $260 ..... **Now $158**

Makita

10" LS1000, List $348 .... **Now $198**
8¼" 2708, List $336 ..... **Now $198**

HITACHI

10" C10FA, List $419
Now $238

LIMITED QUANTITY • FREE FREIGHT

acme Electric

TOOL CRIB OF THE NORTH

CALL TOLL FREE FOR MIKE

VISA 1-800-358-3096 MasterCard

KILN DRY YOUR OWN LUMBER

nyle corporation

the nation's largest manufacturer of dehumidification dry kilns is now offering small 500 to 10,000 board feet drying systems.

★ Made completely in the USA
★ The leader of the industry
★ Offering excellent warrantees
★ Expert consultation and service

nyle DRY KILN SYSTEMS

P.O. Box 1107-A
Bangor, Maine 04401
Call toll free 1-800-648-9200
In Canada or Maine
Call 207-989-4335

from ⅛ to 1½ in. The tool comes complete with detailed instructions and supplies. We also carry OLSON bandsaw stock at reasonable prices. Send for literature. NEW MILFORD SPECIALTIES CO. 50¢. *Circle No. 1315.*

PERSONAL BRANDING IRONS — Brochure describes branding irons that enable you to put your name on you work quickly and easily. Made especially for branding wood, they are available with 1, 2, or 3 lines of copy or with your logo. Changeable date also available. NOVA TOOL CO. $1.00. *Circle No. 1380.*

LUMBER DRYING — Nyle Corp., the largest manufacturer in the United States of dehumidification Dry Kiln Systems, offers *Introduction to Dehumidification Lumber Drying.* NYLE CORP. Free. *Circle No. 1390.*

64-PAGE PROBLEM SOLVER CATALOG — Over 700 woodworking items. Authentically reproduced furniture pulls, knobs, locks, casters, table slides, hinges, supports, latches, catches, bed hardware, veneer, chair cane, books, and much more. Satisfaction guaranteed. PAXTON HARDWARE LTD. $3.50. *Circle No. 1480.*

PEG — Turns green wood into beautiful projects as seen on page 46 of February 1986 issue of Wood. Supplies and catalogs of other items for the home woodworker. Price of catalog refundable with first order. PITSCO. $4.00. *Circle No. 1490.*

QUARTZ CLOCK MOVEMENTS — Our 60-page catalog features a large selection of movements, hands, dials, bezels, numerals, weather instruments, prints, as well as a full-line of clock making supplies. Thousands of ultra-thin pendulum and chime movements in stock at all times. Most orders shipped within 48 hours. PRECISION MOVEMENTS. Free. *Circle No. 1555.*

THE REVOLUTIONARY PARALOK TABLE SAW FENCE — makes cutting at least seven times more accurate and much faster. Single-handed operation works on the same principle as a drafting table, fence is always parallel to blade. Adjustable at intervals of 1/64 in. Send for more information. QUINTEC MARKETING. $1.00. *Circle No. 1585.*

TOOLS ON SALE — A division of Seven Corners Ace Hardware Inc. offers a comprehensive catalog featuring over 190 pages of the most competitive prices in the industry. If you're looking for savings and fast delivery on over 1,800 items, request our catalog. This catalog offers one of the most complete selections of power tools available anywhere from the most respected manufacturers in the industry: Milwaukee, Makita, Porter-Cable, Black & Decker, Freud, Bosch, Delta, and many more. SEVEN CORNERS ACE HARDWARE INC. Free. *Circle No. 1670.*

LETTER LAYOUT GUIDES — Brochure containing complete information about a new product of special interest to scroll sawers, carvers, and wood sign makers. A lettering guide to layout large letters and numbers to be cut in wood or other materials. Made from a durable plastic material for years of use. Price of brochure is refundable with first order. SEYCO SALES CO. $3.00. *Circle No. 1710.*

LAMINATED SOUTHERN PINE TABLE TOP — Make your own woodworker's bench. Send for information. SOUTHERN PINE. Free. *Circle No. 1740.*

PORTABLE SAWMILL SYSTEM — You can harvest your own wood with the Sperber Sawmill. No need for heavy equipment. Cut lumber to size where it falls. Many of our customers have paid-off their mill with one weekend's cutting — or less. Send today for brochure package and start milling your own wood. SPERBER TOOL WORKS. $1.00. *Circle No. 1743.*

SYSTEMS IN JOINERY — New 25-page illustrated catalog featuring many uses of the joint-matic and introduction of other high quality machines, fixtures, and cutting tools that make many of the more difficult tasks in woodworking easier. STRONG TOOL DESIGN. $2.00. *Circle No. 1745.*

CABINET MAKERS' TOOLS AND SUPPLIES — New 224-page catalog of fine hand and power tools for cabinet makers or serious woodworkers. Also featured are three sections on hardware, supplies, and cutting tools. This catalog takes the mystery out of using European hardware. A must reference for the woodworker. THE SOURCE. $3.00. *Circle No. 1810.*

TIMBERS COUNTRY STORE — Catalog features hundreds of woodworking supplies, toy patterns, furniture patterns, tool use and instruction books, woodworking pattern books, hardwood toy and furniture parts plus many hard to find tools and shop supplies. TIMBERS COUNTRY STORE. Free. *Circle No. 1820.*

ATTENTION WOODWORKERS — Learn how you can afford a quality 24 in. scroll saw that you build from a kit. Also ask how, with the WHEEL-RIGHT, you can mass- produce wooden wheels by using your drill press. THE TOOL COMPANY. $1.00. *Circle No. 1840.*

TOYMAKERS SUPPLIES — Catalog of over 100 full-size wooden toy patterns — classic to contemporary designs from Packard Le Baron to Streamlined train and moon machine. Easy to follow, fully illustrated patterns which appeal to all ages. Hardwood wheels, shaker pegs, axles, etc., in stock. Accessory kits of pattern and turnings available. TOY DESIGNS. $1.50. *Circle No. 1860.*

CLASSIC CARS AND TRUCKS — Flyer of seven full-size wooden toy patterns of early 1900's motor vehicles — 1912 White Gas Truck, 1929 Chrysler Imperial, 1924 Dodge Delivery Van, 1931 Packard Le Baron, 1915 Peirce Arrow, 1926 Gramham Brothers Truck, and 1929 Chevy Truck. Easy to follow instructions, pictorial assembly views and complete stock list. Two inch spoked wheels available to compliment these designs. TOY DESIGNS. 40¢. *Circle No. 1861.*

TOYMAKER'S SUPPLY COMPANY — has your best bulk price on quality wooden toy parts and toy plans. Over 50 turnings to make your toys professional looking. Send for catalog. TOYMAKER'S SUPPLY CO. Free. *Circle No. 1863.*

WOOD TOY PATTERNS — Patterns for all ages including childrens' patterns and executive toys. New catalog has many new patterns to choose from including parts and wheels. Send for new catalog and receive a coupon for free wheels and axle pegs. TOYS AND JOYS. $1.00. *Circle No. 1865.*

IF YOU ARE INTERESTED IN RESTORING ANTIQUES — this 112-page catalog packed with un-

usual, hard-to-find items is just for you. Included are hundreds of essential items for antique restoration including top quality brass reproduction hardware, oil lamps and accessories, numerous wood component repair parts and kits, caning and basketry supplies, everything needed for wood refinishing, related tools, books, and a complete line of upholstery equipment and supplies. All at wholesale prices. Send for this informative catalog. VAN DYKE' SUPPLY CO. $1.00. *Circle No. 1970.*

SOLID WOOD CLOCK KITS — Full-color catalog of beautiful, easy-to-make clocks. Grandfather, mantel, and wall clocks. All solid wood with solid brass pre-assembled movements. All parts handcut for perfect assembly even by beginners. VIKING CLOCK CO. 50¢. *Circle No. 1980.*

WOODCARVING TOOLS — Whittlers and carvers — Warren Tool Co. offers a catalog for you full of whittling and carving hand/power tools, books, stones, wood, and supplies. Since 1927, the finest in woodcarvers tools. WARREN TOOL CO., INC. 60¢. *Circle No. 2020.*

BEAUTIFUL WOOD FINISHING — with Watco Danish Oil Wood Finish. Full-color *How to Beautifully Finish Wood* booklet enables anyone to create professional finishes the first time with all types of wood. One application of Watco Wood Finish seals, primes, finishes, hardens, protects, beautifies, penetrates deeply into the wood; outlasts surface coats three to one. Eight attractive Danish Oil colors now available. Eliminates pre-staining. WATCO-DENNIS CORP. Free. *Circle No. 2025.*

WOOD FINISHING SUPPLIES — A 35-page catalog of everything needed for finishing wood. From strippers, abrasives, stains, shellacs, varnish, lacquer, oil finishes, solvents, thinners, rubbing mediums, books, brushes, touch-up items, respirators, tack rags, to gold leaf and gilding supplies. The first 8 pages of this catalog are devoted to helpful information on how to use these materials. WOOD FINISHING SUPPLY CO., INC. $2.50. *Circle No. 2062.*

WOODWORKERS CATALOG — More than a catalog — it's one of the best sources for quality woodworking tools. You'll find everything from bit braces to wood borers, from saws to sharpening stones. Every product is sold satisfaction guaranteed. WOODCRAFT SUPPLY CORP. Free *Circle No. 2070.*

THE JAPAN WOODWORKER'S 1986 CATALOG — is loaded with the best tools you can get your hands on. In our catalog you will find a complete selection of Japanese tools for the woodcarver, carpenter, and cabinet maker. Send for catalog plus supplements for next two years. WOODLINE-THE JAPAN WOODWORKER. $1.50. *Circle No. 2075.*

POWER-FEED DRUM SANDER — Use the Woodmaster Model 1200 to dimension and finish-sand cabinet pieces, resawn stock, paneling, grandfather clocks, toys, table tops, knees, burls, crotches, and much more. Choose from 12-in. and 26-in. models complete with motor and stand. 30 day free trial . . . easy terms. Send for information kit. WOODMASTER TOOLS. Free. *Circle No. 2080.*

HIGH PRECISION SCROLL SAW — The sturdy, new Woodmaster Model 1600 gives you all the features found in more expensive machines including big, 16-in. throat capacity, 2-in. cutting depth, a generous, oversized worktable, ball-bearing drive . . . and much more! Send for complete facts. See how you can use the Woodmaster Model 1600 in your own shop for one full month completely without risk. Send for information kit. WOODMASTER TOOLS, INC. Free. *Circle No. 2081.*

GIANT 24½-IN., 3-SPEED BAND SAW — Big 24½-in. throat easily handles large scrollwork, complex curves, 4x8 sheets. 9-in. vertical cut makes it easy to resaw valuable hardwoods. Ball bearing construction, all-steel welded frame to eliminate deflection. Can be ordered complete with motor, stand, dust collector, rip fence, scroll saw table. Full instructions. Send for complete facts on how you can try this versatile saw without risk. Easy terms. WOODMASTER TOOLS, INC. Free. *Circle No. 2082.*

PLANER/MOLDER/JOINTER/SANDER — This variable speed, power feed tool converts low-cost lumber into valuable finished stock. Turns out perfect quarter-round, casing, base mold, tongue and groove . . . all popular patterns including picture frames. Joints super-true edges, squared stock, bevels and chamfers. Optional sanding attachment quickly converts unit to one of the finest drum sanders available. 30-day free trial . . . easy terms. Send for information kit. WOODMASTER TOOLS, INC. Free. *Circle No. 2083.*

WOODWORKER SUPPLIES — Thirty-year-old company offers a very interesting line of unique supplies. Most items are hand illustrated in this 112-page, well organized, full-color catalog. Included are veneers, hardwoods, wood parts, specialty hardware, furniture trim, finishes, books, plans, etc. THE WOODWORKERS' STORE. $1.00. *Circle No. 2120.*

WOODWORKERS SUPPLY — Offers high quality tools and supplies for skilled, amateur, and professional woodworkers. Our complete catalog includes machinery, hand tools, plans, router bits, shaper cutters, wood specialities, and more. For your two year subscription send to WOODWORKERS SUPPLY OF NEW MEXICO. $2.00. *Circle No. 2125.*

WOODWORKING ASSOCIATION OF NORTH AMERICA — First international association for woodworkers. Benefits include our quarterly magazine *International Woodworking*, specials from selected manufacturers, group health and life insurance, access to the woodworking network. WOODWORKING ASSOC. OF NORTH AMERICA. 50¢. *Circle No. 2127.*

QUALITY AMERICAN-MADE WOOD TURNINGS — such as shaker pegs, spindles, toy wheels, toy parts, craft items, and dowel rods in birch, oak, walnut, and cherry. Send for complete 32-page catalog. WOODWORKS. $1.00. *Circle No. 2130.*

WOOD WORLD CATALOG — Send for your catalog on lumber, veneer, hand and power tools, with helpful hints on how to use your tools and materials to their best advantage. Send for complete color catalog. WOOD WORLD. $2.50. *Circle No. 2140.*

WOODWORKING MACHINERY CATALOG — Workbench Tool Co. is now offering the Powermatic 26 spindle shaper, 3 hp., 1 ph., ½ to ¾ in. spindles, reversing switch for only $1625 FOB. Send for catalog. WORKBENCH TOOL CO. $2.00. *Circle No. 2145.*

PROJECT PLANS FOR WOODWORKERS — Professionally designed projects include furniture, playthings, and accessories, to more complex projects such as storage sheds and gazebos. These plans are designed using readily available materials, keeping in mind standard sizes of lumber. Instructions are clear and concise, and occasionally include tips that will make your job easier. Some plans have a cut-out materials list to take with you to the lumber yard. All plans are current, and we are constantly adding to our line. Order our catalog now and get started! THE WORKSHOP BLUEPRINT CO. $2.00. *Circle No. 2150.*

EXOTIC HARDWOODS — Wyndham Woods offers the finest exotic hardwoods, precision cut and dried to our specifications at a modern European mill. As a direct importer we can offer substantial savings on such fine woods as padouk, mahogany, shedua, doussie, zebrawood, and many others, as well as domestic species and veneers. For the best wood at the best prices, send for our catalog. WYNDHAM WOODS, INC. $1.00 (Refundable with order). *Circle No. 2160.*

WOODWORKING POWER TOOLS AND MACHINERY — A selection of full-line catalogs from leading manufacturers featuring complete specifications and accessory listings; discount price lists included. THE XYLOPHILE'S CO. $2.50. *Circle No. 2170.*

DOOR SHOP™ MANUAL AND CATALOG — The 35-page Door Shop™ manual is clearly written and beautifully illustrated with over 156 detailed drawings covering the complete process of door building. Each section covers proper methods and exact set-ups for the router table, including how to recognize and correct for errors. There are sections covering design, lumber selection, measuring, panel raising, rail and stile fitting, guides, clamping, gluing, and finishing. This is the most comprehensive manual out today. When you purchase the Door Shop™ manual for $5.00 you also recieve a 32-page router bit and shaper cutter catalog free. $5.00 rebated with purchase of our Door Shop™ or Panel Raiser™ bits. ZAC PRODUCTS INC. $5.00. *Circle No. 2195.*

Information

WORTH WRITING FOR

Better Homes and Gardens®
WOOD MAGAZINE,August, 1986
Dept. JAW06
P.O. BOX 2051
CLINTON, IA 52732

TO ENSURE PROMPT HANDLING OF YOUR ORDER FOLLOW THESE INSTRUCTIONS:

- **Circle your choice**
- **Enclose cash, check, money order for cost of booklets plus $2.00 service charge (no stamps/foreign)**
- **Send coupon and remittance to address above**
- **ALLOW 4-6 WEEKS FOR DELIVERY**
- **Coupon expires August 17, 1987**

WOOD SUBSCRIPTION

1. A 1 year WOOD subscription (6 issues) for $15.00 — a $6.00 savings off newstand rate. Allow 6-8 weeks for first issue. Add $6.00 outside U.S. Be sure to include payment with total below.

FREE LITERATURE

Circle numbers below corresponding to items in this issue.
Please include $2.00 for handling charge

317 402 495 550	551 552 705 781	1130 1210 1240 1250	1390 1555 1670 1740	1820 1863 2025 2070	2080 2081 2082 2083	

PRICED LITERATURE

Numbers below refer to items on which there is a charge.
Please include proper remittance.

2 .... $1.00 3 .... $1.00 12 .... $2.00 45 .... $1.00 50 .... $2.00 60 .... $1.00 65 .... $1.00 66 ..... 50¢ 85 ..... 50¢ 115 .... $2.00 150 .... $4.50 230 .... $1.00	245 .... $1.00 250 .... $1.00 258 .... $1.00 259 .... $1.00 260 .... $1.00 270 .... $1.00 272 .... $3.00 275 .... $1.00 285 .... $3.00 303 .... $1.00 304 .... $3.00 308 .... $2.00	320 .... $1.00 350 .... $1.00 420 .... $2.00 430 .... $1.00 440 .... $1.00 450 ..... 50¢ 530 ..... 25¢ 560 .... $1.00 585 .... $2.00 600 .... $3.00 630 ..... 25¢ 631 ..... 25¢	710 .... $1.00 750 .... $2.00 765 .... $2.00 770 .... $1.00 771 .... $1.00 780 .... $1.00 1023 ..... 25¢ 1080 ..... 50¢ 1081 ..... 50¢ 1216 .... $1.00 1217 .... $2.00 1220 .... $1.00	1300 .... $1.00 1310 .... $4.00 1315 ..... 50¢ 1380 .... $1.00 1480 .... $3.50 1490 .... $4.00 1585 .... $1.00 1710 .... $3.00 1743 .... $1.00 1745 .... $2.00 1810 .... $3.00 1840 .... $1.00	1860 .... $1.50 1861 ..... 40¢ 1865 .... $1.00 1970 .... $1.00 1980 ..... 50¢ 2020 ..... 60¢ 2062 .... $2.50 2075 .... $1.50 2120 .... $1.00 2125 .... $2.00 2127 ..... 50¢ 2130 .... $1.00	2140 .... $2.50 2145 .... $2.00 2150 .... $2.00 2160 .... $1.00 2170 .... $2.50 2195 .... $5.00

Name (please print) _____

Address _____

City _____

State _____ Zip Code _____

I AM ENCLOSING:

$_____ for priced items

$ 2.00 for handling

$_____ total remittance

Print this article

The Bulletin Board

FACTS, FACES & FABLES OF INTEREST TO HOME WOODWORKERS

Tiny timber managers. Don't step on those little ants on your next hike in the woods! English scientists believe that wood ants help trees by eating insects that eat leaves. Insects that lunch on leaves can reduce a tree's foliage by 10 percent, reducing timber production by 30 percent.

TIMBER MONOGRAPHS: WHAT YOU SEE IS WHAT YOU REALLY GET

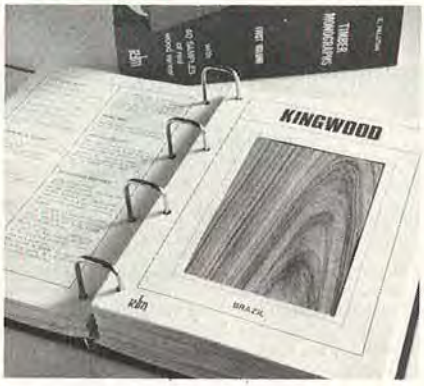

When would you pay $130 for three "books" that total less than 300 pages? Answer: When 120 of those pages boast real, 3¾×5½" veneer samples of some of the prettiest wood you've ever seen.

Palutan Publishing has assembled a classy, three-volume, ring-bound set, called *Timber Monographs,* which describes 120 wood species from around the world. The books tell you all you need to know about each species to use it in woodworking—then wows you with a sample. One hundred-thirty dollars is a substantial outlay, but if you're really into wood—what the heck!

For a free brochure describing them, write: *Palutan Publishing Corp., Dept. W, 144-19 75th Ave., Flushing, NY 11367.*

AROUND THE NATION

We want to hear from you! Items must be received a minimum of five months prior to publication date. (For example, events for the December issue must reach us by July 1). Sorry, only items of regional and national interest can be considered for inclusion.

Tenth Annual American Crafts Festival, July 5–6
Lincoln Center, New York, N.Y. Juried show and sale of handcrafted work, including carvings and other wood items.

Ann Arbor Art Fair, July 23–26
Downtown Ann Arbor, Mich. America's first and foremost art and craft fair. About 1,000 exhibitors in sidewalk booths throughout the downtown area. Many woodworkers.

40th Annual Pacific Northwest Arts & Crafts Fair, July 25–27
Bellevue Square, Bellevue, Wash. One of the oldest and largest crafts fairs in Northwest. All media, lots of woodworkers.

International Decoy Contest, Aug. 15–17
River Center, Davenport, Iowa. Juried show and sale of wild fowl carvings, paintings, and prints. Sponsored by Affiliated Wood Carvers.

International Wood Collectors Society Annual Meeting, Aug. 17–22
Christian Athletes Conference Center, Roachdale, Ind. Exhibit of exotic and unusual native wood items made by members. Outdoor seminar on spalted wood. Collector's wood auction. Open to public. Lodging limited. Contact William Perkins, Chairman, RR #2 Box 345, Roachdale, IN 46172. Phone 317/522-1592.

DELTA

THE BIG NAME FROM THE LITTLE GARAGE IN MILWAUKEE

Young machinists Herbert E. Tautz and William Peters found bustling post-World War I Milwaukee perfect for a new industry—home power tools.

Working spare time in a one-car garage on N. Fifth Street, they designed a water-cooled dental tray and a micrometer that in 1919 launched the Delta Specialty Company. Then, the partners charted a new course.

Before the 1920s, most woodworking machinery had been large, heavy, and expensive. Tautz wanted to design and sell affordable, compact home woodworking equipment. But Peters had had enough, and left the business in 1923. Delta's first woodworking tool—a hand-operated, benchtop scroll saw that sold for $20—emerged in the mid-1920s.

Tautz then added the *Handi-Shop*—a circular saw, lathe, and scroll saw combined—and a line of *Homecraft* tools. His firm grew to 250 employees.

In the 1940's, Delta was purchased by the forerunner of Rockwell International. After World War II, the company relocated to larger facilities in Ohio and Mississippi. A few years later, Delta officially changed its name to Rockwell Power Tool.

Now, 67 years after its founding, the company is Delta again. As a subsidiary of Pentair, Inc., Delta International Machinery Corp. headquarters in Pittsburgh, employs 1,500 people in three countries, and sells 450 machines.

All-American success story: Delta began in this one-car garage on Milwaukee's N. Fifth Street.

In World War II, Delta patriotically urged woodworkers to postpone buying their power tools.

freud®

SUPERSALE

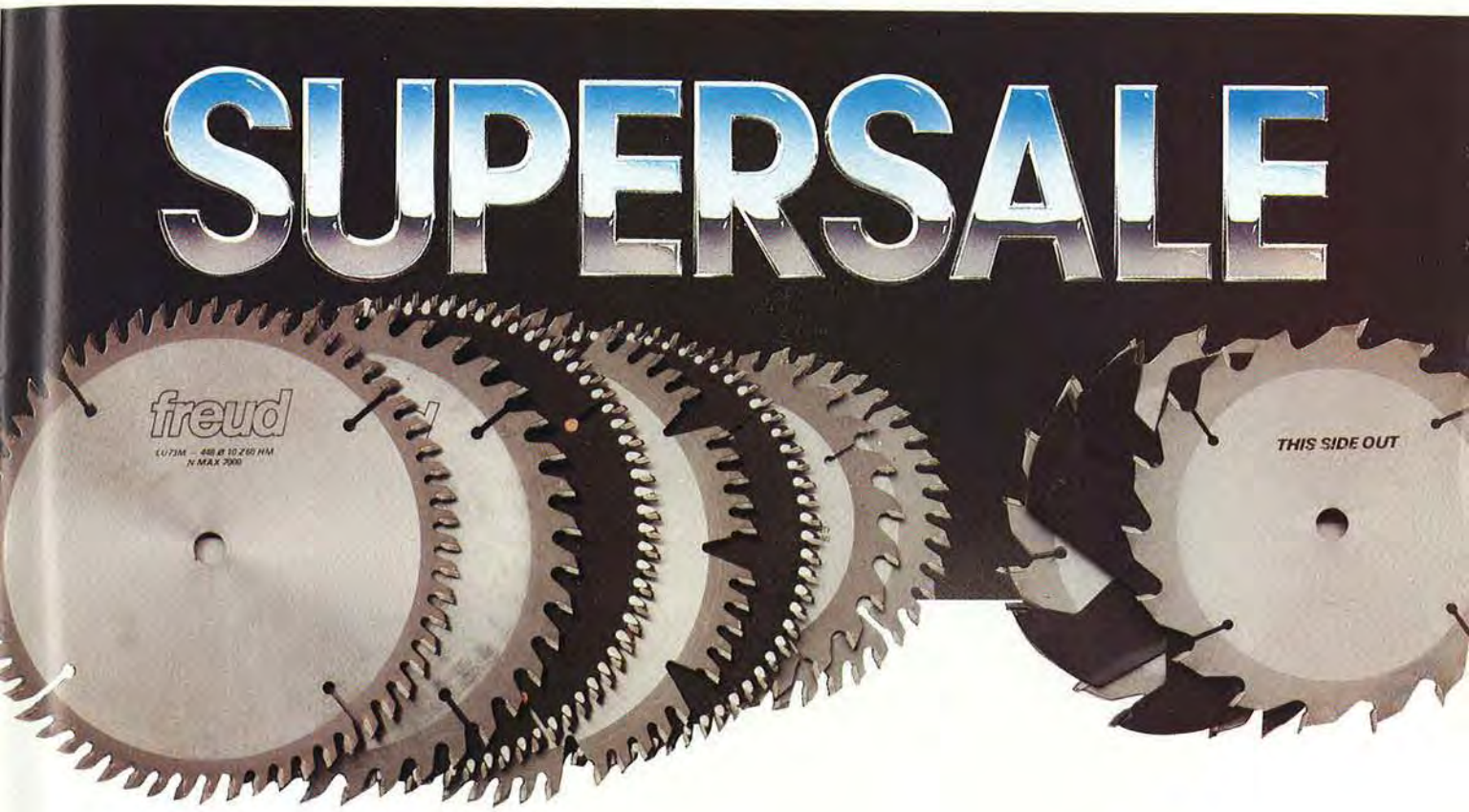

Item	Description	List	Sale
LU72M010	10 x 40 Gen. Purpose ATB	$ 68.58	$ 39.90
LU73M010	10 x 60 Gen. Purpose ATB	79.95	44.90
LU81M010	10 x 40 Gen. Purpose TCG	69.30	42.90
LU82M010	10 x 60 Gen. Purpose TCG	86.50	47.90
LU84M011	10 x 50 Combination 4 & R	74.51	44.50
LU85M010	10 x 80 Fine Cut Off ATB	110.88	73.50
LM72M010	10 x 24 Rip Flat Top	64.85	44.50
PS203	7¼ x 24 Gen. Purpose ATB	27.45	18.99
PS303	7¼ x 40 Gen. Purpose ATB	32.97	24.99
DS306	6″ Dado Max. Width of Cut 13/16″	146.90	109.50
DS308	8″ Dado Max. Width of Cut 13/16″	179.90	119.50

NOTE: All Saws and Dado have 5/8″ Bore
ATB = Alternate Top Bevel
4 & R = 4 Teeth & 1 Raker Tooth
TCG = Triple Chip Grind

Call Us Toll Free!

FOR THE NAME OF YOUR LOCAL DISTRIBUTOR:

- In California Call Toll Free: 1-800-824-0141
- If You Live In This Area: 1-800-824-8045
- If You Live In This Area Call Toll Free (Outside NC) 1-800-334-4107

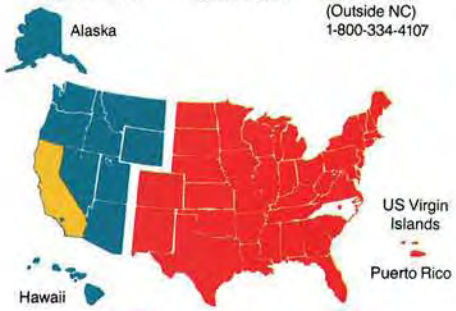

freud®

218 Feld Ave., High Point, NC 27264
(919) 434-3171

1570 Corporate Dr., Suite G
Costa Mesa, Cal. 92626
(714) 751-8866

SALE ENDS DECEMBER 31, 1986

NEW FROM freud® FOR...

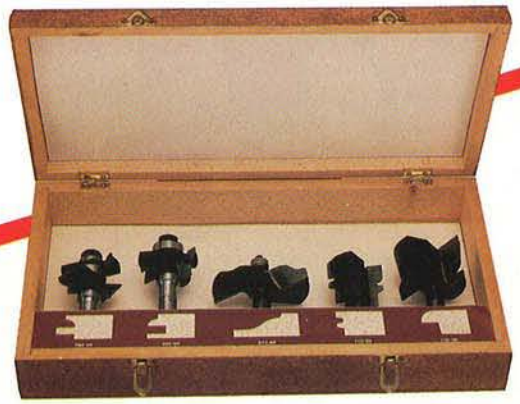

ROUTING

Freud's new 5 piece router bit door system allows you to produce raised panel cabinet doors with your 1/2" chuck router. Each bit is made with the finest carbide available and sharpened with a 600 grit diamond wheel.

The bit profiles are: rail and stile, raised panel door lip, glue joint. The bits come in a wooden, box jointed case for ease of storage.

As a set, the 94-100 list for **$248.00** ..... Sale Price **$199.00**

SHAPING

Freud's new 5 piece cabinet set for the 3/4" - 1/2" shaper comes with rail and stile, raised panel, door lip and glue joint cutters. A box jointed, wooden case is included for ease of storage and prevention of damage.

The cutter profiles are: rail and stile, raised panel door lip, glue joint

The cutters are made with the highest of manufacturing standards and materials. If purchased individually, they would cost $510.00.

As a set, the EC-900 list for **$499.00** ..... Sale Price **$349.00**

BORING

Freud's new 16 piece Forstner bit set comes in a box jointed, wooden storage case. These bits, guided by their rim, will create a clean flat bottom hole in wood. A special heat treated steel is used in their production to assure long lasting edges.

The 16 bits range in size from 1/4" to 2 1/8" in 1/8" increments. These bits will fit any stationary or portable drill using a 3/8" or larger chuck.

The FB-100 Forstner bit set list for **$249.00** ..... Sale Price **$199.00**

DRILLING

Freud's new 50 piece drill bit set comes with a heavy duty carrying case for ease of storage and protection. This set consists of: A) 25 high speed steel bits (1/16 - 1/2 in 1/16 increments) B) 4 high speed steel bits for use in sheet metal (1/4, 3/16, 1/8, 3/32) C) 6 chrome vanadium steel brad point bits for use in wood (1/8, 5/32, 3/16, 1/4, 5/16, 3/8) D) 6 carbide tipped masonry bits with hex shanks (5/32, 3/16, 7/32, 1/4, 5/16, 3/8 E) 1 center punch, 2 Allen keys and 6 depth stops to set bits at pre-determined depths.

These bits will fit any stationary or portable drill using a 3/8" or larger chuck. The DB-050 drill bit set list for **$89.00** ..... Sale Price **$69.00**

For The Name Of Your Local Distributor:
Call Toll Free (outside N.C.) 1-800-334-4107
In North Carolina Call 1-919-434-3171